ExoMars Orbiter

Experiment Proposal Information Package

EXM-OM-IPA-ESA-00001

Issue 1 Revision 1

11-1-2010

		Date and Signature
Prepared	**ESA/NASA Joint Engineering Working Group**	
Agreed	**ESA-SRE-PE** **A.Haldemann, G.Gianfiglio**	11 Jan. 2010 11 Jan. 2010
Approved	**ESA SRE-PE** **D. McCoy**	11 Jan. 2010

DOCUMENT CHANGE LOG

Issue/ Revision	Date	Modified paragraphs	Observations
1 / 0	18-12-09	First Issue for Release	New Document
1 / 1	11-1-2010	Revision 1:	
		p.12: Joint Instrument Definitinon Team Final Report: document reference added p. 13, para. 4.1: (editorial) clarification of NASA mission objectives p. 14, para. 4.2: (editorial) addition of payload definition.	
		p. 15, para. 4.2: deletion of references to specific EDL mass p. 16, para. 4.2: (editorial) clarification on commanding concept	
		p. 16, Table. 4.2.1: (editorial) background colours removed p. 29, para. 4.5.3.4: (editorial) simplification of relay phase operations desription	
		p. 61, para. 6.1.1, point7: (editorial) highlighting removed p. 62, para. 6.1.2: (editorial) statement about PS moved up, "Programme" replaced with "2016 Mission" p. 64, para. 6.1.3.1: (editorial) PI responsibilities 9 and 10 clarified	
		p. 70, para. 6.4.1.3: (editorial) (I-PDR) replaced by (IFPDR) p. 72, para. 6.5: (editorial) correct table numbers quoted: 6.5-1, 6.5-2, 6.5-3 p. 73, para. 6.5.2: (editorial) Table 3 changed to Table 6.5-1	

Issue/ Revision	Date	Modified paragraphs	Observations
		p. 75, Table. 6.5-2: (editorial) correct date: 03 MAR 2014 p. 95, Figure. A1-1: (editorial) +Y vector added	
		p. 123 to 128, Tables. A1.3-1 to A1.3-4: Table references changed to: A1.3-1 to A1.3-4, table captions modified: "Space environment during….", Values for solar irradiance brought in line with EXM Space Environment (EXM -MS-RS-ESA-00013) p. 125, section. A1.3.2.4 and table A1.3-2: "early orbit" replaced by "early operational phase"	
		pages 94, 96, 122,133, 134, 135,207: (editorial) correction of table- and figure-references.	

Table of Contents

Table of Contents 4

1 DOCUMENT SCOPE 10

2 DOCUMENT STRUCTURE 11

3 REFERENCE DOCUMENTS 12

3.1 Normative Documents 12

3.2 Informative Documents 12

4 EXOMARS MISSION DESCRIPTION 13

4.1 2016 Mission Objectives 13

4.1.1 Science Background and Objectives 13

4.2 2016 Mission Concept 14

4.2.1 Orbiter Reference Instrument Suite 16

4.3 Mission Phases 17

4.4 ExoMars Orbiter Description 19

4.5 Mission Operations 23

4.5.1 Ground Segment Architecture 23

4.5.1.1 Telemetry Interfaces 24

4.5.1.2 Commanding Interfaces 24

4.5.2 Ground Data Systems 25

4.5.2.1 Operational Downlink Data Flow 26

4.5.2.2 Operational Uplink Data Flow 26

4.5.2.3 Ground Data System Constraints 27

4.5.3 Operations Activities 28

4.5.3.1 Pre-Launch Activities 28

4.5.3.2 Launch, Near Earth Commissioning, Cruise, Approach, EDL, MOI and Aerobraking Activities 28

4.5.3.3 Science Phase Operations 29

4.5.3.4 Relay Phase Operations 29

5 CONSTRAINTS IMPOSED BY MISSION AND ORBITER DESIGN 31

5.1 Payload Activities By Mission Phase 31

5.2 Mass 32

5.3 Field of View and Instrument Accommodation 32

5.3.1 Global Accomodation 32

5.3.2 Mechanical Requirements for Sun Deck Payload (+X) 33

Global view of Sun Deck payload accommodation: 33

5.3.3 Mechanical Requirement for Nadir Deck Payload 34

5.4 Platform Pointing Performance 35

5.4.1 Relative Pointing Error (RPE) ... 35
5.4.1.1 Short term Stability during HR imaging ... 35
5.4.1.2 Long Term stability during Sun occultation ... 36
5.4.2 Absolute Measurement Error ... 36
5.4.3 Absolute Pointing error ... 36

5.5 Platform Pointing Law during Science Phase ... 36
5.5.1 Routine pointing ... 37
5.5.2 Inertial pointing for Sun occultation measurements ... 39
5.5.3 Fixed nadir pointing for HR imaging sessions ... 40
5.5.4 Limb pointing capability ... 41
5.5.4.1 Limb trajectory ... 42
5.5.4.2 Limb coverage ... 45

5.6 Power ... 56

5.7 Data Downlink ... 57

5.8 Computational Resources ... 57

5.9 Aerobraking ... 57

5.10 Orbiter and Instrument Lifetime ... 59

6 PAYLOAD AND INSTRUMENT MANAGEMENT ... 60

6.1 Roles and Responsibilities ... 60
6.1.1 Project responsibilities ... 60
6.1.2 Project Scientists ... 62
6.1.3 Instrument Provider Responsibilities ... 63
6.1.3.1 PI Responsibilities ... 63

6.2 Communications with ESA, Industry, and Partners ... 66
6.2.1 US Export Control Compliance (ITAR) ... 66

6.3 Schedule ... 66
6.3.1 Project Schedule ... 66
6.3.2 Flight Instrument Delivery Schedule Margin ... 68

6.4 Reviews ... 68
6.4.1.1 NASA Monthly Management Reviews (MMRs) ... 69
6.4.1.2 Instrument Interface Meetings (IIMs) ... 70
6.4.1.3 Instrument Accommodation Assessment ... 70
6.4.1.4 Instrument Interface Preliminary Design Review (IFPDR) ... 70
6.4.1.5 Instrument Preliminary Design Review (I-PDR) ... 71
6.4.1.6 Instrument Confirmation Review (ICR) ... 71
6.4.1.7 Instrument Critical Design Review / Qualification Review (I-CDR/QR) ... 71
6.4.1.8 Environmental Test Readiness Review (ETRR) ... 71
6.4.1.9 Instrument Delivery Review (IDR) ... 72
6.4.1.10 Instrument Integration Readiness Review (I2R2) ... 72
6.4.1.11 Instrument Operations Readiness Review (I-ORR) ... 72
6.4.2 Use of Teleconferencing and Video Conferencing ... 72

6.5 Deliverables ... 72
6.5.1 Cost and Schedule Reports ... 73
6.5.2 Hardware ... 73
6.5.2.1 Instrument Structural and Thermal Model (STM) ... 74
6.5.2.2 Instrument Electrical Test Model (ETM) ... 74
6.5.2.3 Flight Model (FM) ... 74
6.5.2.4 Flight Spares Strategy ... 74
6.5.3 Software ... 75
6.5.4 Documentation ... 76

6.5.4.1 Experiment Interface Control Document (E-ICD) and Experiment Implementation Plan (EIP) 81
6.5.4.2 Functional Requirements Document (FRD) 82
6.5.4.3 Functional Design Description document (FDD) 83
6.5.4.4 Experiment Operations Plan (EOP) 83
6.5.4.5 End Item Data Packages (EIDP) 83
6.5.4.6 Product or Mission Assurance Plan 84

6.6 Receivables 85

6.7 Product/Mission Assurance Program 85

A1 INSTRUMENT INTERFACE REQUIREMENTS 88

A1.1 General Design Requirements 88
A1.1.1 Identification and Labelling 88
A1.1.1.1 Configuration Control Definitions 88
A1.1.1.2 Hardware Identification 90
A1.1.1.3 Connector Identification 91
A1.1.2 Standard Metric System 91
A1.1.3 Lifetime Requirements 92
A1.1.4 Maintainability 93
A1.1.5 Workmanship 93
A1.1.6 Fault Propagation 93
A1.1.7 Coordinate Systems 94
A1.1.7.1 S/C Reference Coordinate Systems 94
A1.1.7.2 Unit Reference Coordinate Systems 95
A1.1.7.3 Unit Optical Alignment Frame 96
A1.1.7.4 Instrument Line of Sight (ILS) 96
A1.1.8 Instrument Alignment 97
A1.1.8.1 Pointing Definitions 97
A1.1.8.2 Alignment Definition 98
A1.1.8.3 Alignment philosophy 99
A1.1.8.4 Misalignment Contributions 100
A1.1.8.5 FOV and Instrument Line of Sight (ILS) 101
A1.1.8.6 Optical Reference Requirements 101
A1.1.8.7 Fine alignment 102
A1.1.9 External Configuration Drawings 102

A1.2 Mechanical Design and Interfaces Requirements 103
A1.2.1 General 103
A1.2.2 Definition of Accommodation Envelopes 104
A1.2.2.1 Sun Deck Envelope and FoV 105
A1.2.2.2 Nadir Deck Envelope and FoV 109
A1.2.3 Instrument mass/ centering requirements 112
A1.2.4 Mechanical Interface Control Document 113
A1.2.5 Instrument Mounting 114
A1.2.6 Mechanical Environment 116
A1.2.7 Structural Design 118
A1.2.8 Payload Generated Disturbances 121
A1.2.9 Instrument Mechanical Mathematical Models 121

A1.3 Thermal Design and Interfaces Requirements 122
A1.3.1 Thermal Control Definitions 122
A1.3.2 Thermal Environment 123
A1.3.2.1 AIT and AIV phase 123
A1.3.2.2 Launch site phase 123
A1.3.2.3 Launch phase 123
A1.3.2.4 Early Orbit 124
A1.3.2.5 Cruise phase 125

A1.3.2.6 4-sol orbit phase 125
A1.3.2.7 Aero-braking phase 125
A1.3.2.8 Mars Science phase 126
A1.3.3 Thermal Interfaces, Design Guidelines, Requirements and Responsibilities 129
A1.3.4 Instrument Thermal Mathematical Models 131

A1.4 Electrical Power Design and Interfaces Requirements 131
A1.4.1 Power Quality – Unregulated Bus 131
A1.4.1.1 Power Voltage 131
A1.4.1.2 Redundancy 132
A1.4.1.3 Voltage fluctuation 132
A1.4.1.4 Input protection 132
A1.4.1.5 Undervoltage 132
A1.4.2 LCL Characteristics 133
A1.4.2.1 LCL Classes 133
A1.4.2.2 In-rush Current 133
A1.4.2.3 DC-DC Stability 134
A1.4.3 Ripple and Spikes 135
A1.4.4 Line Impedence Simulation Network (LISN) 135

A1.5 Data Handling Design and Interfaces Requirements 135
A1.5.1 General 135
A1.5.2 Instrument Commanding 136
A1.5.3 Instrument Telemetry 137
A1.5.4 Onboard Time Distribution 137
A1.5.5 Solid State Mass Memory 138
A1.5.6 Discrete Signals 138

A1.6 Software Design and Interface Requirements 139
A1.6.1 Software Design Requirements 139
A1.6.2 SW Implementation Requirements 139
A1.6.3 Instrument Autonomy and FDIR 140
A1.6.3.1 General 140
A1.6.3.2 Instrument FDIR at Equipment Level 140
A1.6.3.3 Instrument FDIR at System Level 141

A1.7 Electromagnetic Compatibility Requirements 141
A1.7.1 EMC Design Requirements 141
A1.7.1.1 Grounding / isolation Concept 141
A1.7.1.2 Bonding Concept 143
A1.7.1.3 Signal Classes 144
A1.7.1.4 Harness, Connectors, and Shielding 144
A1.7.1.5 Bonding of Thermal Control Items 144
A1.7.2 Frequency Plan 145
A1.7.3 EMC Performance Requirements 145
A1.7.3.1 Conducted Emissions 145
A1.7.3.2 Conducted Susceptibility 147
A1.7.3.3 Radiated Emissions 149
A1.7.3.4 Radiated Susceptibility 151
A1.7.3.5 Electrostatic Discharge 153
A1.7.3.6 Susceptibility to Micro Cut Off 154
A1.7.3.7 Corona Effect 154

A1.8 Environmental Requirements 154
A1.8.1 Cleanliness and Instrument Handling 154
A1.8.1.1 Introduction 154
A1.8.1.2 C&CC Management - PI Responsability 155
A1.8.1.3 Cleanliness Requirements 155
A1.8.1.4 Design Requirements 158
A1.8.2 Pressure Environment, Venting 164

A1.8.3 Radiation 166
A1.8.4 Micrometeorite Environment 168
A1.8.5 Planetary Protection and Contamination Requirements 169
A1.8.5.1 Introduction 169
A1.8.5.2 Planetary Protection Orbiter Payload Requirements 169

A1.9 Ground Support Equipment Design and Interface Requirements 170
A1.9.1 Mechanical Ground Support Equipment 170
A1.9.2 Electrical Ground Support Equipment 170
A1.9.3 Special Ground Support Equipment 171

A2 INSTRUMENT ASSEMBLY, VERIFICATION AND TEST REQUIREMENTS 172

A2.1 AIV Sequence Overview 172
A2.1.1 INTRODUCTION 172
A2.1.2 DEFINITIONS 172
A2.1.3 DOCUMENTATION 176
A2.1.3.1 Instrument Development Plan 176
A2.1.3.2 Verification Control Matrix 177
A2.1.3.3 Analysis Reports 177
A2.1.3.4 Test Related Documentation 177

A2.2 Instrument Model Philosophy 178
A2.2.1 Instrument Structural Thermal Model - STM 178
A2.2.2 Instrument Software Model - ISM 178
A2.2.3 Instrument Electrical Test Model - ETM 179
A2.2.4 Instrument Qualification Model - QM 180
A2.2.5 Instrument Flight Model - FM 180
A2.2.6 Instrument Flight Spare Model – FS 181

A2.3 Verification and Test Methods 181
A2.3.1 STRUCTURAL MATHEMATICAL ANALYSIS 181
A2.3.1.1 General 181
A2.3.1.2 Detailed Stress Analysis 181
A2.3.1.3 Mechanism Functional Analysis 182
A2.3.1.4 Dynamic Model 182
A2.3.1.5 Dynamic Analysis 183
A2.3.2 THERMAL ANALYSIS 183
A2.3.2.1 General 183
A2.3.2.2 Thermal Design Cases 183
A2.3.2.3 Thermal Mathematical Models 184
A2.3.2.4 Software Codes 184
A2.3.2.5 Deliverable Models 185
A2.3.2.6 Thermal Analysis Uncertainties 185
A2.3.2.7 Thermal Control Design Documentation 185
A2.3.3 TESTING, GENERAL RULES 185
A2.3.3.1 Test Sequences 185
A2.3.3.2 Test Level Tolerances 189
A2.3.4 Test Requirements 190
A2.3.4.1 EMC TEST REQUIREMENTS 190
A2.3.4.2 Electrostatic Discharge Tests (ESD) 199
A2.3.4.3 STRUCTURAL TEST REQUIREMENTS 201
A2.3.4.4 Pressurized Items Test Requirements 203
A2.3.4.5 MECHANISM TEST REQUIREMENTS 204
A2.3.4.6 THERMAL TESTS REQUIREMENTS 205
A2.3.5 Inspections 210
A2.3.5.1 VISUAL INSPECTION 210
A2.3.5.2 PHYSICAL PROPERTIES 210
A2.3.6 Calibration 211

A2.3.7 Final Acceptance 211
A2.3.7.1 GENERAL REQUIREMENTS 211
A2.3.7.2 ACCEPTANCE REVIEW 212

A2.4 Instrument and Spacecraft Integration 212
A2.4.1 Spacecraft-level AIV sequence 212
A2.4.2 Instrument and Spacecraft Integration 215

A2.5 Instrument and Spacecraft Testing and Verification 216

A3 OPERATIONAL REQUIREMENTS 218

A3.1 Ground Segment Description 218
A3.1.1 Mission Operations 218
A3.1.1.1 Basic Principles 218
A3.1.1.2 In Flight Thermal Characterization 219
A3.1.1.3 Solar Conjunction Operations 219
A3.1.1.4 Reporting 219
A3.1.1.5 Payload Operations Support 220
A3.1.1.6 Near Earth Commissioning Operations 220
A3.1.1.7 Cruise Operations 221
A3.1.1.8 Science Operations 221
A3.1.1.9 Payload On-Board Software Maintenance 222
A3.1.1.10 Mission Planning 223

A3.2 Mission Products 225
A3.2.1 Telemetry Processing at MOC 225
A3.2.1.1 Generic 225
A3.2.1.2 Auxiliary Data 226
A3.2.1.3 Data Disposition System 226
A3.2.1.4 Long Term Raw Data Archiving 227
A3.2.1.5 Delivery Formats 227
A3.2.1.6 Command Request Handling 227

A3.3 Testing, Training and Simulation 228
A3.3.1 General 228
A3.3.2 Satellite Interface Tests 228
A3.3.2.1 Mission Sequence Test 228
A3.3.2.2 System Validation Tests 228
A3.3.2.3 System Validation Test (SVT) Data Flow 229
A3.3.3 System Operations Validation (SOV) 229
A3.3.3.1 Data Disposition System (DDS) Interface Tests 230
A3.3.3.2 MOC/SOC End-to-End Test 230
A3.3.4 Simulations Campaign 230

A3.4 Instrument Documentation and Data Inputs 230
A3.4.1 Documentation 230
A3.4.2 Instrument Database 231

A4 GLOSSARY 232

A4.1 Acronyms and Abbreviations 232

1 DOCUMENT SCOPE

The Experiment Proposal Information Package (E-PIP) defines all technical, managerial and programmatic data that are relevant in the context of the Announcement of Opportunity (AO) for the scientific instruments on the ExoMars Trace Gas Orbiter Spacecraft. It does not yet contain formally agreed requirements, however all stated parameter values and other data reflect the currently agreed baseline for the spacecraft, the mission, mission operations, product assurance, and managerial approach. Also, all relevant supporting information, as far as currently known, is contained in the E-PIP.

Following instrument selection the Experiment Interface Requirements Document (E-IRD) will be issued to define all the technical, managerial and programmatic requirements applicable to each scientific instrument interface with the ExoMars Trace Gas Orbiter Spacecraft and Mission.

All instruments will have to be compliant with this E-IRD. The E-IRD shall be considered as a baseline for the definition and update of the individual Instruments Experiment Interface Control Document (E-ICD) relevant to each instrument through all phases of the ExoMars Trace Gas Orbiter development.

2 DOCUMENT STRUCTURE

This document is organized in two major parts:

Chapters 3 to 6 provide all essential information about the ExoMars Trace Gas Orbiter, its mission, and about all issues related to the potential instrument payload. It is expected that Instrument Providers address and discuss these points in their response to the AO, as far as relevant for each proposed instrument, demonstrating proper understanding, and compliance of their proposed instrument.

The second part consists of a set of annexes, in which further relevant details can be found about the items addressed in chapters 1 to 6. This information can be used in support of the AO.

Overall, the complete contents of chapters 3 to 6 and the appendices reflect the requirements, which will be part of the to-be-issued E-IRD.

In section 3 of the E-PIP the relevant normative and informative documents for this E-PIP are listed.

Section 4 provides for a description of the ExoMars Trace Gas Orbiter, its mission and mission timeline, as well as a description of the ground segment, the operational concept and the basic data flow.

In section 5 all relevant information is compiled which has a direct impact on the technical accommodation of the proposed instruments on the ExoMars Orbiter, covering a wide spectrum of interface parameters.

Section 6 lists all essential points related to management, responsibilities, and product/ mission assurance relevant for the instruments.

In Appendix 1 all technical design and interface detailed issues are captured.

Appendix 2 describes in detail the logic and process of instrument assembly, testing and verification, including the definition of the instrument model philosophy and the definition of the relevant verification and test methods.

Appendix 3 provides details about mission and instruments operations.

In Appendix 4 a list of acronyms and abbreviations is provided.

3 REFERENCE DOCUMENTS

3.1 Normative Documents

None

3.2 Informative Documents

Informative References (IR) are listed for information and as an aid for understanding.

For the explicit, dated or versioned, references, subsequent amendments to, or revisions of, any of those references do not apply to this document.

- ExoMars Product Assurance Requirements EXM-MS-RS-ESA-00002
- ECSS E-ST-50-12C SpaceWire - Links, nodes, routers, and networks (Document available through: http://www.ecss.nl/)
- ECSS E-ST-50-11C SpaceWire – protocols (Document available through: http://www.ecss.nl/)
- ECSS E-70-41A Telemetry and Telecommanding packet utilization (Document available through: http://www.ecss.nl/)
- ECSS E-ST-31C Thermal control (Document available through: http://www.ecss.nl/)
- MIL-Std.-1553B, notice 4, 12 Feb. 1980, Digital Time Division Command/Response Multiplex Data Bus
- Final Report of the 2016 Mars Orbiter Bus Joint Instrument Definition Team, Zurek, R., Chicarro, A., November 10, 2009, NASA-JPL, ESA
- CCSDS 102.0-B--5 Packet Telemetry, Blue Book, Issue 5, November 2000
- CCSDS 203.0--B--2 Telecommand Part 3 -- Data Management Service, Blue Book, Issue 2, June 2001

4 EXOMARS MISSION DESCRIPTION

The ExoMars programme has evolved to a scenario with two missions:

- One mission under ESA lead, launched in 2016 by a US launcher including a European Orbiter with US Instruments and a European EDL demonstrator
- Another mission under NASA lead, launched in 2018 by a US launcher including a European Rover and a US Rover both deployed by a US EDL system

The present chapter aims to describe objectives and concepts of the 2016 mission.

4.1 2016 Mission Objectives

The ExoMars Programme will demonstrate key flight and in situ enabling technologies in support of the European ambitions for future exploration missions, as outlined in the Aurora Declaration and will accomplish fundamental scientific investigations critical to fulfilling NASA's planned next steps in the exploration of Mars.

Particularly, the ExoMars 2016 mission shall accomplish the following objectives:

- *Technological objective*: Entry, Descent and Landing (EDL) of a payload on the surface of Mars;
- *Scientific objective*: to investigate Martian atmospheric trace gases and their sources.

Moreover, the mission will provide communications capability for present and future ESA/NASA missions (2018-20).

4.1.1 Science Background and Objectives

Recent observations of the planet Mars both from orbital observations at Mars as well as from terrestrial observations have indicated detection of methane as well as temporal, perhaps spatial variability in the detected signal. Current photochemical models cannot explain the presence of methane in the atmosphere of Mars and its reported rapid variations in space and time. Neither appearance nor disappearance can be explained, raising the following scientific questions:

- Is there ongoing subsurface activity?
  - Are there Surface/near Surface Gas Reservoirs (particularly ice)? Where are they?
- What is the nature of gas origin: geochemical or biochemical?
  - Are other trace gases present? What are the isotopic ratios?
- What processes control the lifetimes of atmospheric gases?
  - Time scales of emplacement or activation and modification (seasonal, annual, episodic, longer term)
  - Role of heterogeneous chemistry
  - Atmospheric surface interactions

These questions lead to three central objectives of the science for this mission:

- Detection of a broad suite of atmospheric trace gases
- Characterization of their spatial and temporal variation
- Localization of source of key trace gases

Each of these objectives has been characterized further, in order to enable the definition of this model payload, driven by the satisfaction of these objectives:

- Detection:
  - Requires very high sensitivity to the following molecules and their isotopomers: H2O, HO2, NO2, N2O, CH4, C2H2, C2H4, C2H6, H2CO, HCN, H2S, OCS, SO2, HCl, CO, O3
  - Detection sensitivities of 1-10 parts per trillion
- Characterization:
  - Spatial and Temporal Variability: Latitude-longitude coverage multiple times in a Mars year to determine regional sources and seasonal variations (reported to be large, but still controversial with present understanding of Mars gas-phase photochemistry)
  - Correlation of concentration observations with environmental parameters of temperature, dust and ice aerosols (potential sites for heterogeneous chemistry)
- Localization:
  - Mapping of multiple tracers (e.g., aerosols, water vapor, CO, CH4) with different photochemical lifetimes and correlations helps constrain model simulations and points to source/sink regions
  - Spatial resolution required to localize sources may require tracing molecules at the ~1 part per billion concentration
  - Inverse modelling to link observed concentration patterns to regional transformations (e.g., in dusty air) and to localized sources would require simulations using circulation models constrained by dust and temperature observations

4.2 2016 Mission Concept

ESA will design, build and integrate a large Spacecraft Composite consisting of an ESA Orbiter which will carry the scientific trace gas payload instrumentation and an ESA EDL Demonstrator.

The Spacecraft Composite will be launched in early January 2016 by a NASA provided Atlas V 421 class Launcher and will arrive at Mars approximately 9 months later in mid-October of 2016. Prior to arrival at Mars the ESA EDL Demonstrator will be released from the ESA Orbiter and will enter the Mars atmosphere from a hyperbolic arrival trajectory.

The release of the EDL Demonstrator will take place 3-5 days prior to the critical Mars Orbit Insertion manoeuvre by the ExoMars Orbiter. The sequence of manoeuvres following the

separation will be designed to maximise the chance of receiving the UHF radio beacon signals from the EDL Demonstrator during its Entry, Descent and Landing phase. After capture, the ExoMars Orbiter will be in a 4 sols elliptical orbit around Mars that will be maintained for about 8 sols from landing, such to provide the capability of an additional pass over the landing site for EDL data up-load sessions (potentially, depending on the insertion errors, a pass 4 sols after landing may be achieved). Subsequently, the ExoMars Orbiter will begin a series of manoeuvres to change the orbit inclination to 74 degrees and reduce the Apoares using onboard fuel reserves, down to a 1 sol orbit. Further reductions of the Apoares will be performed using aerobraking techniques over a period of about 6 to 9 months followed by a final circularisation manoeuvre to arrive at the science and communications orbit with an altitude in the range of 350 Km to 420 Km.

The science operations phase is expected to begin at the earliest in May of 2017 (depending on the actual duration of the aerobraking phase) and last for a period of one Martian year. The science instruments on-board will remotely sense the presence, quantity and potential sources and sinks of Methane, its precursor and product trace gases in the Martian atmosphere. Near the end of the science operations phase the two rovers of the 2018 mission should arrive at Mars (January 2019) so that the emphasis on the ExoMars Orbiter operations may shift to the provide Mars proximity Data Relay function for the Rovers, should other communications assets not be available in orbit around Mars. The ExoMars Orbiter will be designed for consumables that will allow further Mars proximity Data Relay support and science operations until the end of 2022.

The EDL Demonstrator will provide Europe with the technology of landing on the surface of Mars with a controlled landing orientation and touchdown velocity. The design maximises the use of technologies already in development within the ExoMars programme. These technologies include:

Thermal Protection System Material

Parachute System

Radar Doppler Altimeter

Liquid propulsion controlled final braking

The configuration of the ESA EDL Demonstrator will be developed keeping in mind the scalability to future larger landers. Engineering sensors will be incorporated into the design to assess the performance of the system throughout its EDL phase. The EDL Demonstrator will have a heat shield diameter of about 2.4 m and will support entry on a hyperbolic trajectory. The system will be designed to survive the possibility of a severe dust storm since it will arrive at a period of high probability of encountering a Mars Global Dust Storm. After entry the system will deploy a single stage Disk Gap Band parachute and will complete its landing by using a closed-loop Guidance, Navigation and Control (GNC) system based on a Radar Doppler Altimeter sensor and on-board Inertial Measurement Units that will guide a liquid propulsion system by the actuation of 3 clusters of thrusters to be operated in pulsed on-off mode.

The EDL Demonstrator is expected to survive on the surface of Mars for a short time (about 8 sols) by using the excess energy capacity of its primary batteries. A set of scientific sensors will be embarked as a demonstration of surface science, within the mass and electrical (including radio-frequency) resources available in the EDL Demonstrator without adding additional systems for solar power generation or for thermal control, such as Radioisotope Heater Units.

The 2016 mission is led by ESA and the spacecraft operations will be performed by ESOC in Darmstadt including the EDL Demonstrator operations. Science operations for the NASA instruments of the Orbiter will be managed by NASA but realtime commanding and telemetry monitoring of the instruments will be the responsibility of ESOC through coordination with the NASA responsible groups. Long-term command planning for the orbiter science payload will be lead by the NASA Science Operations Center. Science operations for the ESA EDL Demonstrator instruments will be managed by ESA and telemetry monitoring (no commanding foreseen) of the instruments will be the responsibility of ESOC through coordination with the ESA responsible groups.

The proximity link communications operations are enabled through a contribution by NASA of the Electra UHF transceiver on-board the ExoMars Orbiter. The transceiver operations will be the responsibility of ESOC, however, the maintenance and planning of the proximity communications support for the multiple surface assets at Mars will be performed jointly with NASA.

4.2.1 Orbiter Reference Instrument Suite

An ESA/NASA Joint Instrument Definition Team (JIDT) has defined a reference implementation of the science objectives recalled in section 4.1.1. The JIDT identified a typical set of potential Instruments to be accommodated on ExoMars Orbiter, which is briefly summarised in ***Table 4.2-1 Typical potential Orbiter Experiments***. This set of instruments is defined only for the purpose of facilitating the necessary Orbiter pre-design work.

Acronym	Description	Observation Modes
SFTIR	Solar Fourier Transform IR Spectrometer: **Broad survey** of trace gases with high precision	2 solar occultations per orbit (~24/day); processing interferorgrams throughout orbit
SLNIR	Solar-Nadir IR Mapper: Detection and mapping of **specific** trace gases	2 solar occultations per orbit + dayside nadir/limb on each orbit
Sub-mm	Sub-mm Spectrometer profiler/mapper **Atmospheric temperature & winds** plus **H2O and specific** trace gases	Continuous operations switching between nadir, space, different limb; observe both sides of ground track

TIR	Thermal IR profiler/mapper spectrometer or radiometer for atmospheric **temperature and dust**, plus **H2O and some** trace gases	Continuous operations switching between nadir, space, different limb; observe both sides of ground track
WAC	Wide Angle Camera imaging **atmospheric phenomena** for discriminating between surface, dust clouds, & ice clouds	Cross-track (nearly orthogonal to velocity vector) horizon-to-horizon; requires alignment with ground track motion
HRCSC	High Resolution Color Stereo Camera: **Surface imaging**	Designated targets of opportunity (nadir pointing, fore/nadir/aft views); requires alignment with ground track motion

Table 4.2-1 Typical potential Orbiter Experiments

4.3 Mission Phases

The 2016 Mission phases are summarised in Table 4.3-1 ***ExoMars 2016 Mission Phases Overview***. For each phase, the main events are highlighted together with expected mission elapsed time. The provided information is based on available mission analysis simulations result.

The reported epochs are just indicative and assume a launch at the start of the launch window (LW). Precise epochs shall be tuned upon launch date. For a launch date at start of LW, i.e. 05/01/2016, arrival at Mars is expected on 14/10/2016. For a launch date at end of LW, i.e. 24/01/2016, arrival at Mars is expected on 27/10/2016

The aerobraking phase duration is now estimated between 6 and 9 months. Of course, the aerobraking duration will have a direct impact on beginning of science phase and will influence the period of rovers data relay superimposition (earliest arrival on Mars surface of 2018 rovers mission is 14-01-2019).

MISSION EVENTS				
Phase	*Key events*	*Epoch*	*Mission elapsed time from launch*	*Remarks*
Launch	Launch with Atlas V 421 class launcher	Jan 2016	- -	Launch window from 05th to 24th January 2016
Early operations	Injection in escape trajectory	Jan 2016	1967 s	Spacecraft commissioning starts after injection in escape trajectory. Expected LEOP duration is 10 days.

Interplanetary cruise	Trajectory correction manoeuvre #1 (TCM #1)	Jan 2016	0.0274 years	10.0 days	This event indicates the end of the Early Operation Phase and the transition to the Interplanetary Cruise from Earth to Mars (on a direct T2 transfer).
	Trajectory correction manoeuvre #2 (TCM #2)	May 2016	0.3450 years	126.0 days	Preparation for the DSM implementation. Time between TCM#2 and DSM: 10.0 days.
	Deep Space Manoeuvre (DSM)	May 2016	0.3724 years	136.0 days	DSM to target in the B-plane compatible with the selected landing latitude. Time between DSM and TCM#3: 10.0 days.
	Trajectory correction manoeuvre #3 (TCM #3)	May 2016	0.3998 years	146.0 days	Removal of DSM dispersions.
Mars approach	Start of increased orbit determination (OD) activities	Sep 2016	0.6517 years	237.8 days	Initiation of the intense orbit determination process including DDOR. Time between start of intense OD and arrival: 45.0 days.
	Trajectory correction manoeuvre #4 (TCM #4)	Sep 2016	0.7064 years	257.8 days	First terminal TCM. Time between TCM#4 and arrival: 25.0 days
	Trajectory correction manoeuvre #5 (TCM #5)	Oct 2016	0.7571 years	276.3 days	Last terminal TCM. Time between TCM#5 and arrival: 6.5 days
EDL Demo separation	Orbiter - EDL demo separation	Oct 2016	0.7598 years	277.3 days	Time from separation to arrival between 2.5 and 5.5 days
EDL DEMO EVENTS					
Phase	*Key events*	*Epoch*	*Mission elapsed time from launch*		*Remarks*
Coasting	Start of EDL demo alone mission	Oct 2016	0.7598 years	277.3 days	From separation to EIP.
Atmospheric flight	EDL demo pass by the Entry Interface Point (EIP)	Oct 2016	0.7749 years	282.8 days	Entry of the DMC in Mars atmosphere and landing close to the target site.
ORBITER EVENTS					
Phase	*Key events*	*Epoch*	*Mission elapsed time from launch*		*Remarks*
Terminal coasting	Start of Orbiter alone mission	Oct 2016	0.7598 years	277.3 days	From separation to retargeting. Time from separation to retargeting: 1.0 days
	Retargeting manoeuvre	Oct 2016	0.7625 years	278.3 days	Assumed one day after separation and leading to achieving a certain minimum pericentre height.
EDL demo telecommunication coverage	MOI	Oct 2016	0.7749 years	282.8 days	MOI into a 4-sol Mars orbit by means of the Leros engine. 2-orbit phase to cover the landed EDL demo. Orbits between MOI and ICM: 2.5
1-sol orbit Acquisition	Inclination change manoeuvre (ICM)	Oct 2016	0.8030 years	293.0 days	Change from injection inclination to target inclination of 74° with burn near 4-sol apocentre. Orbits between ICM and ARM: 2.5
	Apocentre reduction manoeuvre (ARM)	Nov 2016	0.8312 years	303.3 days	Manoeuvre at pericentre to reduce from 4-sol orbit to 1-sol orbit Orbits between ARM and ASIM 2.5

Aerobraking	Step-in manoeuvre for aerobraking (ASIM)	Nov 2016	0.8383 years	305.9 days	Initiation of aerobraking by the step-in manoeuvre. Aerobraking duration: min 6 months / max 9 months
	Aerobraking step-out manoeuvre (ASOM)	Min / max May '17/ Aug '17	1.3311/ /1.5775 years	485.8/ /575.7 days	Finalisation of the aerobraking phase by a final pericentre increasemanoeuvre to step-out.
Orbiter Science (subordinate Data Relay)	Start of Orbiter science phase	Min / max May '17/ Aug '17	1.3502/ /1.5966 years	492.8/ /582.7 days	Start of the science mission after orbit refinement process. Time between aerobraking and start of science: 7.0 days. Duration of science phase: 1.882 years (one martian year).
	Arrival of 2018 Lander mission	Jan 2019	3.0253 years	1104.2 days	Data relay provided to 2018 Rovers (in-share with Science)
	Rovers landing	Jan 2019	3.0253 years	1104.2 days	Data relay provided to 2018 Rovers (in-share with Science)
	End of Orbiter science phase	Min / max Mar '19/ Jun '19	3.2324/ /3.4788 years	1179.8/ /1269.7 days	Finalisation of the scientific experimentation.
Data Relay	Start of Data Relay for Rovers	Min / max Apr '19/ Jul '19	3.2515/ /3.4979 years	1186.8/ /1276.7 days	Start of Rover data relay phase lasting for the whole 2018 surface mission. Time between end of science and data relay: 7.0 days Duration of the relay phase: 180.0 sols
	End of data Relay for Rovers	Min / max Oct '19/ Jan '20	3.7580/ /4.0044 years	1371.6/ /1461.6 days	Expected end of the Rover mission.
	Start of Data Relay for other mission/surface assets	Min / max Oct '19/ Jan '20	3.7580/ /4.0044 years	1371.6/ /1461.6 days	The Orbiter will act as data relay for eventual future ESA/NASA surface missions
	Orbiter End of Life	31st Dec 2022	6.9869 years	2550 days	Expected spacecraft EOL.

Table 4.3-1 ExoMars 2016 Mission Phases Overview

4.4 ExoMars Orbiter Description

The Exomars Orbiter is built around the Spacebus telecommunication platform from TAS-F with an avionic module (or service module) located on the basis of the platform and a primary structure built around an 1194 mm central tube.

The orbiter configuration provides space to accommodate all science Instruments, in the area of the –Y panel also called Mars Nadir face and the +X panel looking at the cold space during the Mars orbit science phase.

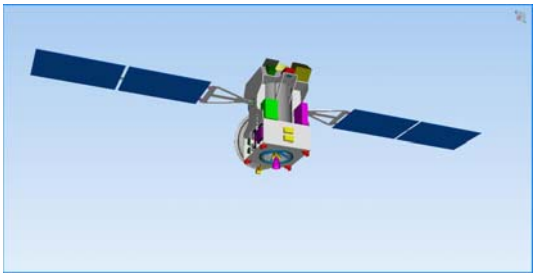

Figure 4.4-1

NADIR face with potential science Instruments

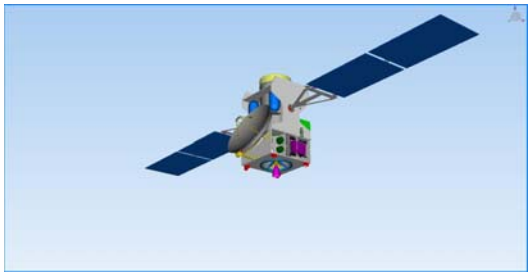

Figure 4.4-2

Anti-Nadir face with HGA for X-band communication with Earth

The Orbiter relies on an NTO-Hydrazine unified propulsion concept with a 645N main engine Leros1b. For fine targeting manoeuvres and critical manoeuvres requiring full redundancy, a set of six 22N thrusters is used. This is the case for instance before EDL demo release and also during each Aerobraking pass.

The Solar panels are made of triple junction GaAs cells with a total geometric area of about 20m².

The dry mass of the Orbiter is about 1000kg, leading to a ballistic coefficient of 37Kg/m²

The attitude control, during science phase, is exclusively done with reaction wheels (20Nms) to minimize propellant consumption during the Mars orbit phase. RCS thrusters are used for wheels desaturation.

The navigation is based on gyro-stellar attitude control law.

During CRUISE, the attitude of the Orbiter will be essentially Sun pointed, keeping the –X (main engine face) exposed to the sun and the EDL Demo face exposed to the cold space.

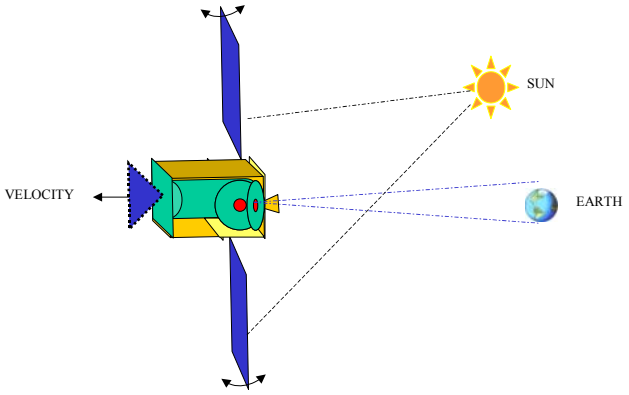

Figure 4.4-3 Attitude during CRUISE

The Spacecraft composite configuration during cruise is sketched in the following picture:

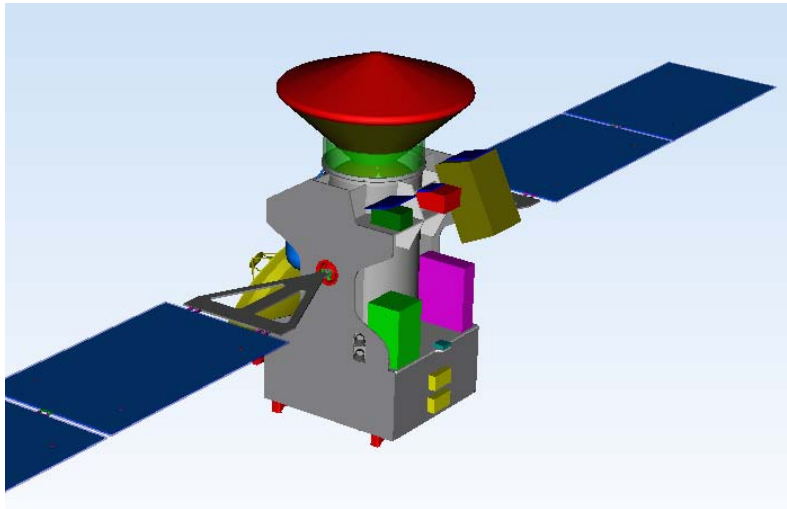

Figure 4.4-4 Conceptual Spacecraft configuration during cruise

During Aerobraking transition phase (several months) the Orbiter will stay most of the orbit sun-pointed, still with –X face exposed to the sun (keeping the science Instruments in the shadow) and only a specific attitude during aerobraking pass is imposed (for stability).

Aerobraking is done on –X face.

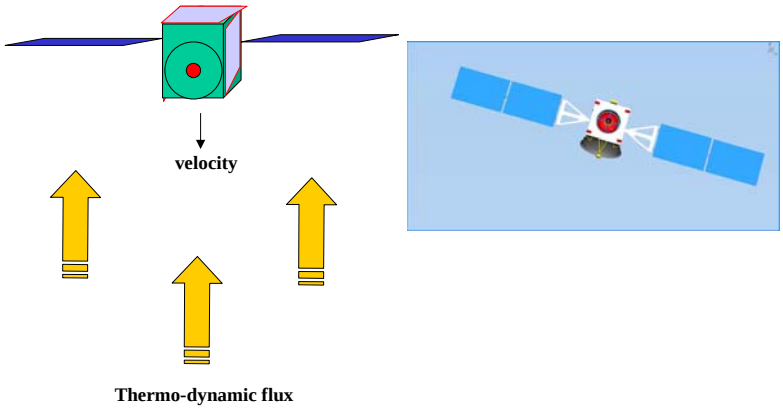

Figure 4.4-5 Attitude during Aerobraking pass

Around Mars the Mars nadir face dictates the attitude of the orbiter which keeps the –Y face towards Mars while the HGA antenna points simultaneously towards the Earth.

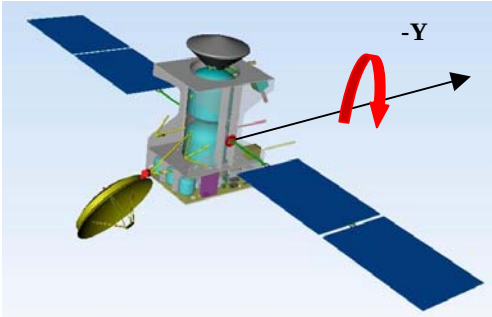

Figure 4.4-6 Attitude during science phase

During the science phase the Orbiter will implement a yaw steering motion (1.5mRad/s) to maximize the power available from solar panels (keeping a 90° Sun aspect angle over the orbit).

Interruption of the yaw motion is foreseen during 1) sun occultation measurements and 2) for high resolution imaging.

Further details about orbiter pointing directions and dynamics are to be found in section 5.2.7.

Three cold faces are available to evacuate the dissipated heat from avionics and science Instruments.

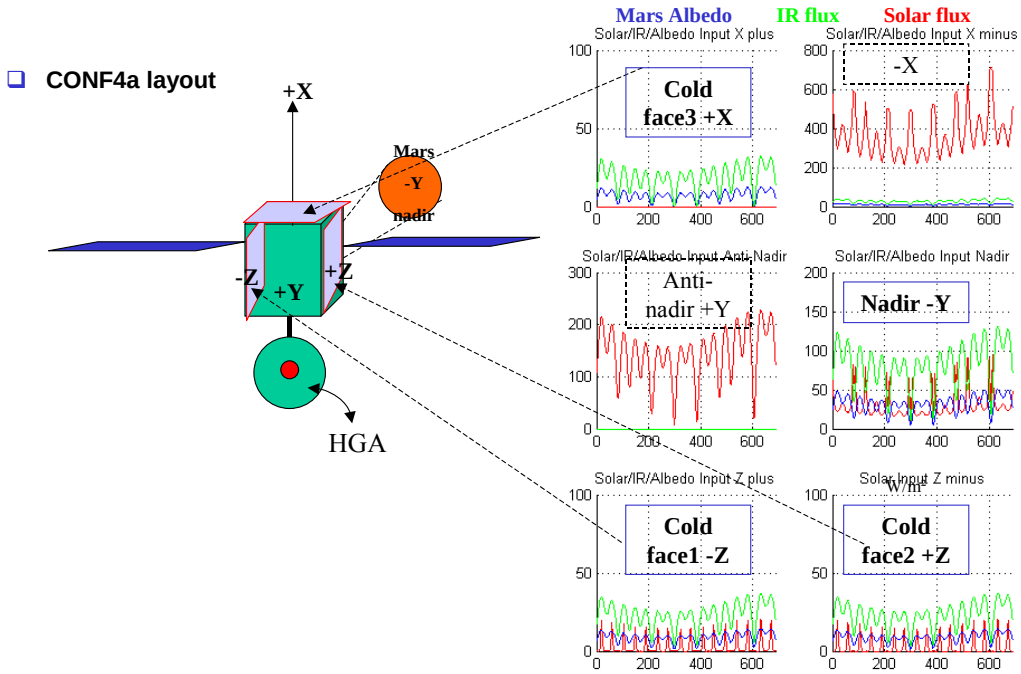

Figure 4.4-7 Distribution of thermal flux around the Exomars Orbiter faces. Thermal flux units (vertical axes) are W/m^2, and time axis units (horizontal axes) are days.

Further details are provided in Appendix A1.3.2.8.

4.5 Mission Operations

The ExoMars 2016 mission operations will be performed from the European Space Operations Centre (ESOC) located in Darmstadt Germany from Launch to End of Mission (EoM) utilizing a standard ground segment architecture of a typical ESA interplanetary mission, augmented by a Science Operations Center provided by NASA, to be located at the Jet Propulsion Laboratory, in Pasadena, California. Key characteristics of the operations systems are described in this section, where a preliminary version of the current detailed interface requirements is provided in Appendix 2. This information should be considered preliminary at this point and will be updated following instrument selection.

4.5.1 Ground Segment Architecture

The main components of the ExoMars Ground Segment architecture (supporting missions in both 2016 and 2018) consist of:

- The Ground Stations, being shared between ESA (ESTRACK) and NASA (DSN)
- The Mission Operations Centre (MOC), located in ESOC, Darmstadt, in charge of the overall mission operations planning, execution, monitoring and control.
- The Science Operations Centre (SOC), which due to the special nature of this ESA-NASA cooperation mission is located at JPL Pasadena California and is in charge of scientific operations, Principal Investigators coordination and scientific analysis support.
- The 2018 Mission Support Area at JPL for NASA Rovers and Cruise/EDL Operations and 2018 Rover Operations Control Center at ALTEC for the European ExoMars Rover in charge of Rover vehicle operations and science coordination, planning, execution and monitoring
- A Relay Coordination Office at JPL for NASA Rovers (NRCO) and at ESOC for the European ExoMars Rover (ERCO) in charge of data relay pass planning and coordination and uplink / downlink product conversion.

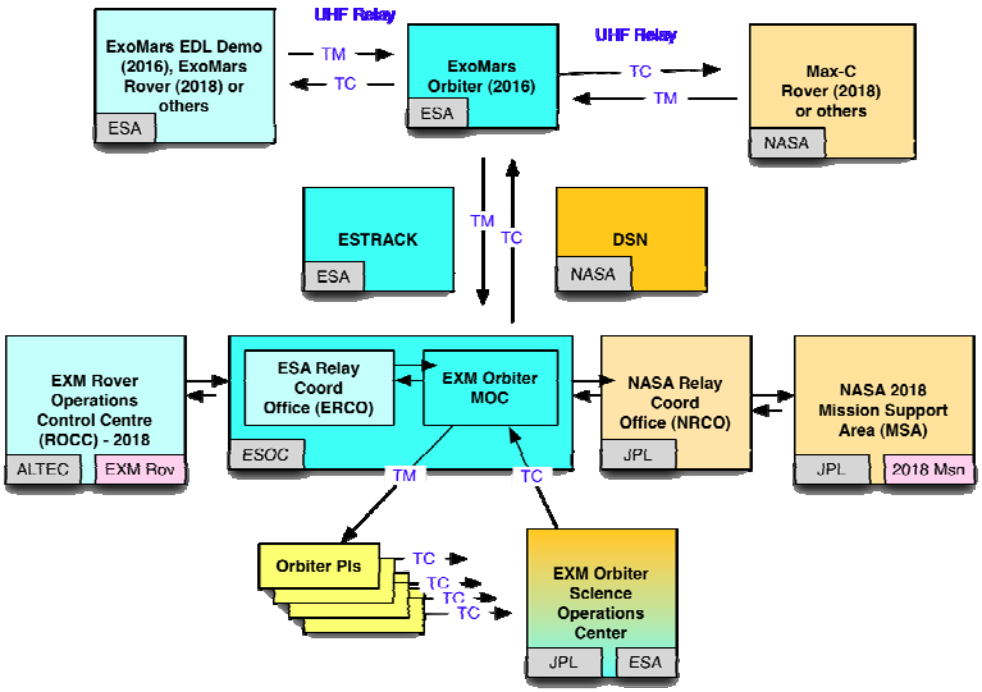

Figure 4.5-1 Ground Segment Architecture

4.5.1.1 Telemetry Interfaces

Exomars Orbiter data acquired via the ESA (ESTRACK) or NASA (DSN) ground stations will be stored at ESOC and made available to the ExoMars Orbiter SOC, ExoMars Orbiter PIs, the NASA Relay Coordination office and the ExoMars Rover Operations Control Centre (ROCC) via the Data Disposition System (DDS).

Any Orbiter payload anomaly (warning or failure events and out of limits) observable at the MOC will be reported by the flight control team to the orbiter PI and the SOC according to rules outlined in the flight operations plan (FOP).

4.5.1.2 Commanding Interfaces

ExoMars Orbiter routine Payload Operations will be coordinated and planned by the Science Operations Centre (SOC) who will interface with the Mission Planning System (MPS) at the ExoMars Orbiter MOC via Payload Operations Requests (POR) and Pointing Request (PTR) files.

For routine science operations the SOC will act as a single interface for payload commanding to the MOC. For engineering payload activities (e.g. payload onboard software management, anomaly troubleshooting) ESOC offers a direct commanding interface for the Orbiter PIs via the DDS.

Commanding products for Mars landed assets (incl. Orbiter UHF configuration settings) will be provided to the ExoMars Orbiter MOC through the ESA Relay Coordination Office (ERCO) for ESA assets and through NASA Relay Coordination Office (NRCO) for NASA assets.

4.5.2 Ground Data Systems

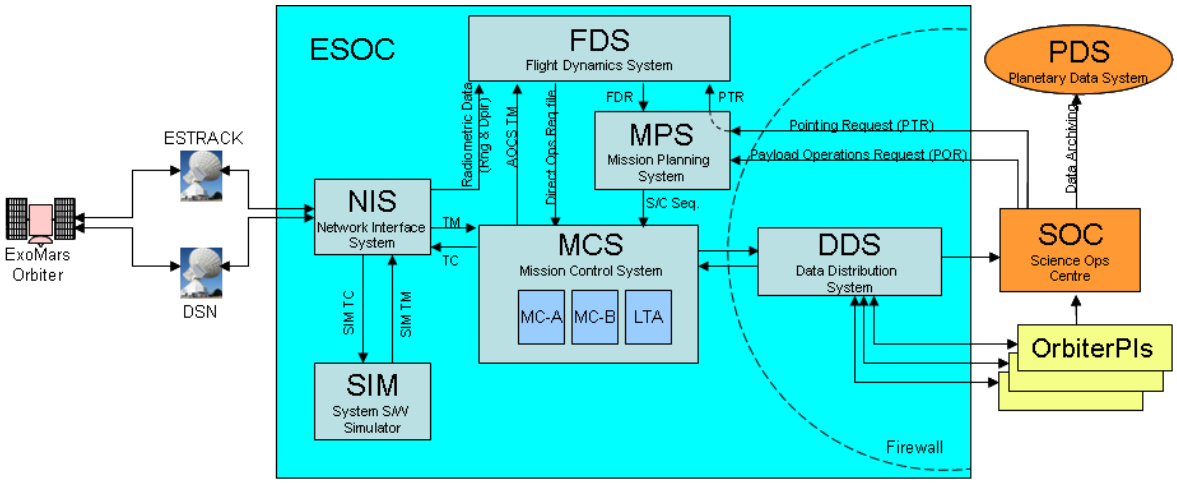

Figure 4.5-2 Ground Data Systems

The ExoMars Ground Data Systems at ESOC include:

1. **MCS:** The Mission Control System, to support with both hardware and software, the data processing tasks essential for controlling the mission, as well as spacecraft performance evaluation and software validation.
2. **DDS:** The Data Disposition System, supporting the acquisition and interim storage of raw scientific data, to be accessible together with raw housekeeping and auxiliary data at remote locations.
3. **MPS:** The Mission Planning System, supporting command request handling and the planning and scheduling of Orbiter spacecraft and payload operations.
4. **FDS:** The Flight Dynamics System, supporting all activities related to spacecraft attitude and orbit determination and prediction, preparation of slew and orbit manoeuvres, spacecraft dynamics evaluation and navigation in general.
5. **SIM:** The System Simulator, a software simulator of the ground stations and space segment, to support procedure validation, operator training and the simulation campaign before each major event of the mission. Orbiter payloads are modelled only to very basic extent (realistic engineering TM response to commands, basic resource consumption – including data generation volume and rates, and response to on-board autonomy).
6. **NIS:** The Network Interface System allows to connect the telemetry and commanding link between Mission Control System and either SIM, or ground station antennas or AIV/T site (for testing).

4.5.2.1 Operational Downlink Data Flow

a) The spacecraft data and navigation data (Doppler and ranging) is acquired by ESA and/or NASA Deep Space Stations and transferred from the stations to ESOC for further processing.
b) The Mission Control System (MCS) at ESOC performs processing on telemetry frames and engineering packets. Telemetry processing includes frame synchronization, depacketization, engineering calibration, display and limit checking of engineering data. Note that processing of science TM packets is not supported.
c) The Flight Dynamics System at ESOC performs processing of radiometric data and supports all activities related to attitude and orbit determination and prediction, preparation of slew and orbit manoeuvres, spacecraft dynamics evaluation and navigation in general.
d) Processed engineering data is available within the secured ESOC network environment (e.g. a dedicated control room, PI support area (PISA)). Display capability for command history, event packet monitoring, packet arrival monitoring and engineering (housekeeping) data monitoring will be provided to all users of the Mission Control System. Engineering data display types include Alphanumeric Displays, Graphics and mimics. The content of the display windows can be defined by the user.
e) All Spacecraft and instruments engineering data are available for real-time and non-real-time access. Raw science data will also be available for real-time access but will not be processed by the ESOC Mission Control System.
f) All payload data is available in raw format through the Data Disposition System (DDS) within seconds after telemetry arrival at ESOC for processing by the PI teams. Each instrument team shall be represented with decision-making authority co-located at ESOC during near earth payload commissioning phase and can also access the data remotely from their home institutes (or SOC) during all mission phases.
g) Science data processing shall be performed by the PI teams (and/or SOC)
h) Auxiliary data products (e.g. command history, orbit files, event files) will be distributed via the DDS.
i) All mission data (engineering and science raw telemetry, engineering calibrated parameters, command history and all auxiliary files) will be stored at the Orbiter MOC for the entire duration of the mission and accessible via DDS to authorised users.
j) The Science data will be archived to the planetary data system (PDS) by the SOC.

4.5.2.2 Operational Uplink Data Flow

a) Command Sequence generation and validation:
Command sequences are written by the ESOC flight control team based on inputs provided in the Spacecraft and Payload User Manual. The command sequences are linked to the flight operations plan and are part of the spacecraft database. Command sequences shall be validated as far as possible during System Validation Tests and Simulations Campaigns. Command sequences which can not be validated during these

campaigns shall be validated for correctness by the spacecraft manufacturer (for spacecraft sequences) and by the relevant PI teams (for payload sequences).

b) Orbiter Payload Operations request generation:
Payload Operations requests (and if required orbiter pointing requests) will be generated by the individual Orbiter PIs and Relay Coordination Offices (ERCO & NRCO) and submitted to JPL SOC in a file format specified by JPL. JPL SOC will coordinate all scientific payload and relay operations according to planning rules to match spacecraft constraints and integrate payload operations and pointing requests in a file format specified by ESOC (e.g. POR & PTR) for transfer to ESOC Mission Planning. The operations requests shall make use of the above mentioned pre-validated command sequences.

c) Operations requests integration and checking:
Multiple payload operations requests and spacecraft operations requests internally generated at the MOC will be integrated and checked by MOC Mission Planning System to ensure the integrity of the orbiter mission timeline. The Mission Planning System will perform resource checking for power, thermal and data generation and provide uplink (commanding) products to the Mission Control System. In addition, Direct Operations Requests (DORs) provided by the Relay Coordination Offices (ERCO & NRCO) directly to the MOC containing Rover commanding bit stream and UHF configuration parameters will be checked automatically when loaded on the Mission Control System.

d) Command radiation:
Commands will be radiated through either ESA ESTRACK or NASA DSN antenna to the spacecraft after validation and approval process is completed. The interface between MOC and any ground station will be based on standard SLE services (CLTU on the forward and RAF, RCF return link)

e) Command verification
Also command verification to the level of acceptance and execution on board will be part of the Orbiter MOC standard services provided the instrument is compliant to the ESA Packet Utilization Standard ECSS-E-70-41A. Command verification on the functional level, this means using the actual payload telemetry, will be under the responsibility if the PIs.

f) Command archiving
Uplink related data files will be archived by the MOC Mission Control System.

4.5.2.3 Ground Data System Constraints

Instrument should comply with the following standards:

- CCSDS 102.0-B--5 Packet Telemetry, Blue Book, Issue 5, November 2000
- CCSDS 203.0--B--2 Telecommand Part 3 -- Data Management Service, Blue Book, Issue 2, June 2001

Additionally, if Instruments want to make use of automated monitoring capabilities provided by the Mission Operation Centre, they should have Telemetry and Command structures defined in the Spacecraft Database at ESOC and comply with the following standard:

- ECSS-E-70-41A, Telemetry and Telecommanding Packet Utilisation, 30 January 2003

Note: If instruments do not comply with this standard (ECSS-E-70-41A) the ESOC Mission Control System (MCS) can at best route engineering data (provided instruments are compliant to the CCSDS standard) but not offer any of the services defined in the PUS standard like event packet (Service 5) monitoring or report based command verification (Service 1). In this case ground data systems at ESOC and the on board data handling system will have only limited capabilities to react to payload anomalies.

4.5.3 Operations Activities

All activities planned for the mission are documented in the Flight Operations Plan (FOP).

4.5.3.1 Pre-Launch Activities

During the pre-Launch phase, the Orbiter payload related operations development activities will emphasise the following areas:
1. Spacecraft and payload instruments operations concept development.
2. Spacecraft and payload instruments operations planning processes development
3. Spacecraft and payload instrument operations Flight Control Procedures (FCP) and Contingency Recovery Procedure (CRP) development based on Spacecraft and Instrument Flight User Manuals.
4. Spacecraft and payload instrument operations interface arrangements and interface control document development
5. Plan and conduct operations testing activities. PIs are expected to participate in System Validation Tests (SVT) to test flight operations sequences and commands
6. Plan and conduct operations training activities:
The PIs will be involved in the development of nominal and mission critical sequences that involve payload functions to be tested during SVTs and simulation campaigns. Post-launch sequences necessary for payload health checks and in-flight calibrations will be developed, tested, and approved by the PI prior to Launch. The PIs are expected to be participants in end-to-end information system tests and operations readiness tests, optionally from ESOC MOC, JPL SOC or their remote sites.

4.5.3.2 Launch, Near Earth Commissioning, Cruise, Approach, EDL, MOI and Aerobraking Activities

During Launch, Approach, EDL, MOI and Aerobraking there are no payload operations foreseen, as these phases are strictly dedicated to navigations, EDL demonstrator and spacecraft platform operations.
During Commissioning phase (starting from L+3days, duration 1 month), there will be daily ground station passes of 10 hrs each in which spacecraft subsystems, EDL Demonstrator Module (EDM) and payload instrument health checks and in-flight calibrations will be carried out. Any planned payload operation during this mission phase shall be documented in dedicated procedures in the Flight Operations Plan (FOP). Flight teams at ESOC, the spacecraft

contractor site, and PI sites will jointly conduct these activities. During commissioning phase ESOC offers interactive support and ExoMars Orbiter PIs are invited to participate from the ESOC PI Support Area (PISA) to allow short reaction times and close collaboration with the orbiter flight control team.

During Cruise phase (L+1month to MOI-1month), there will be 3 ground station passes per week of 4hrs each, allowing only non-interactive operations. The phase is primarily dedicated to navigation operations including deep space manoeuvre (DSM), trajectory correction manoeuvres (TCMs) and Delta DOR (DDOR) tracking campaigns. One non-interactive payload checkout can be performed on a non interfering basis in a dedicated, pre-agreed slot. Timelines for payload checkouts are coordinated by the SOC (within the orbiter constraints) and will be uploaded to the spacecraft for execution outside of ground station passes. When the data is downlinked during subsequent ground station contacts, it can be accessed and evaluated offline by the PIs from their home institute.

4.5.3.3 Science Phase Operations

The mission phase spans from orbiter arrival in the primary science orbit (after aerobraking phase, March-June 2017) and lasts 1 Martian year. During this phase the ExoMars Orbiter will utilize two full ground station visibility periods per day (approx 10hr each) but the tracking passes will be split in several small windows due to Mars occultations. Up to the arrival of the 2018 Rover Missions on Mars (approx mid January 2019) orbital science planned by the SOC has priority over data relay operations for Mars landed assets.
In contrast to the near earth commissioning phase, where all operations are performed interactively via dedicated (test-) procedure, the routine science phase will utilise the functions of the Science Operations Centre at JPL and Mission Planning at ESOC.
Instrument operations will be performed via Payload Operations Request files from JPL SOC to ESOC MOC.
Payload Operations Requests will utilise pre-validated command sequences which are documented in form of Flight Control Procedures (FCP) in the Flight Operations Plan and stored in the spacecraft database. Any deviation will be handled via change request process to the Flight Operations Plan (FOP).

Mission Planning Processes will be developed during the ground segment development phase. Standard ESA concepts split the planning process typically into Long Term (6-12 months) Medium Term (1 month) and Short Term (1 week) planning cycles.

4.5.3.4 Relay Phase Operations

The mission phase spans from the arrival of the 2018 Rover Missions on Mars (approx mid January 2019) to the end of the orbiter mission. As during the science phase the ExoMars Orbiter will utilize two full ground station visibility periods per day (approx 10hr each) but the tracking passes will be split in several small windows due to Mars occultations. During this phase the ExoMars Orbiter relay communications windows for both ESA and NASA 2018 Rovers, as well as other landed missions in future opportunities, will be integrated into the

overall Orbiter operations activities plan, but with priority over orbital science operations in case of conflicts.

As during the science phase, payload operations during data relay operations will be performed via Payload Operations Requests from JPL SOC to ESOC MOC and the same planning processes for spacecraft resources apply.

5 CONSTRAINTS IMPOSED BY MISSION AND ORBITER DESIGN

5.1 Payload Activities By Mission Phase

The following Instruments operations are currently outlined against mission phases:

- LEOP ➔ Instruments OFF (substitution heaters powered)
- Interplanetary Cruise ➔ Two slots will be planned for Instruments check-out: few weeks after launch and few weeks prior arrival. Instruments will be turned on for functional check-out.

  Development of check-out in-flight procedures is under PI responsibility.

  Special Instruments pointing is not guaranteed during check-out slots and shall be evaluated on a case by case basis.

  Instruments are nominally off outside check-out slots. (substitution heaters powered)
- Mars Proximity & EDL Demo separation ➔ Instruments OFF (substitution heaters powered)
- EDL Demo coverage ➔ Instruments OFF (substitution heaters powered)
- 1-sol orbit acquisition ➔ Instruments OFF (substitution heaters powered)
- Aerobraking phase ➔ Instruments OFF (substitution heaters powered)
- Orbiter science phase ➔ Instruments are nominally operated in science mode.

  The Instruments shall be always operated with a timeline compatible with S/C resources. In other words, constraints on power resources and data volume availability (per day) imply that it will be always impossible to operate all Instruments at the same time, although nadir-/limb-observing instruments are expected to operate simultaneously during most of each orbit.

  The science data taking profile of each orbit (except imaging) is expected to be predictable, with two solar occultation observations made during most orbits and near-continuous nadir/limb-scanning observations throughout the rest of the orbit. Imaging is incompatible with solar occultation mode and nadir/limb scanning mode and is also highly critical from resources point of view. For this reason, image acquisition will be a specially sequenced activity.

  In the last part of the phase, the science operations and resources shall be harmonised with data relay functions for 2018 rovers.
- Orbiter data relay phase ➔ Instruments operation TBD (data relay takes priority)

5.2 Mass

The total maximum mass allocated for all of the Instruments is 125 kg, inclusive maturity margins which shall be applied as follows:

- 5% of the current best estimate for recurrent sub-assemblies
- 10% of the current best estimate for modified sub-assemblies
- 20% of the current best estimate for new sub-assemblies

The relevant categorisation (recurrent, modified, new) shall be justified in the mass breakdown description.

The Instrument target masses shall comprise all hardware belonging to the Instruments, including:

- control electronics,
- thermal hardware (e.g.: radiators, coolers, heaters, blankets/ MLI, thermostats),
- internal harness,
- electrical, mechanical and thermal interface hardware, as needed for the accommodation on the two mounting planes for the instruments.

As suggested in the Joint Instrument Definition Team (JIDT) Final report, the mass will be allocated among several instruments.

5.3 Field of View and Instrument Accommodation

5.3.1 Global Accomodation

Instruments shall be mounted on one of two mounting planes, the so-called Sun Deck and Nadir Deck.

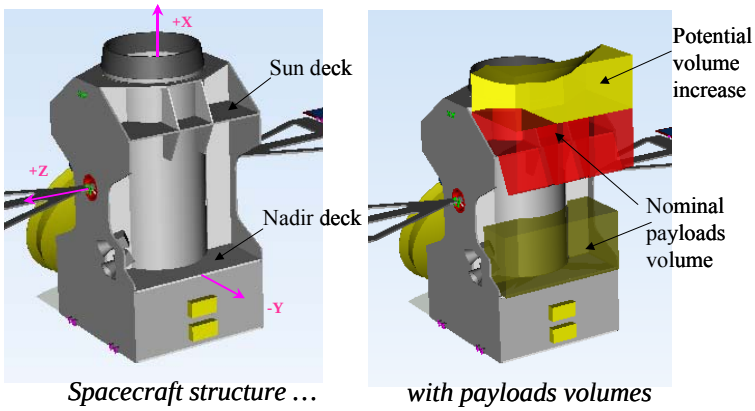

Figure 5.3-1 Spacecraft structure with payload volumes

The distance between Sun Deck and Nadir Deck (i.e. the distance between the 2 mounting surfaces) is 1834 mm (TBC).

5.3.2 Mechanical Requirements for Sun Deck Payload (+X)

Global view of Sun Deck payload accommodation:

The sun deck payload volume is limited by :

- the spacecraft central tube
- the spacecraft shear panels surrounding solar array mechanism
- the shear web necessary to support the sun deck, resulting in a split of the volume into 3 compartments.

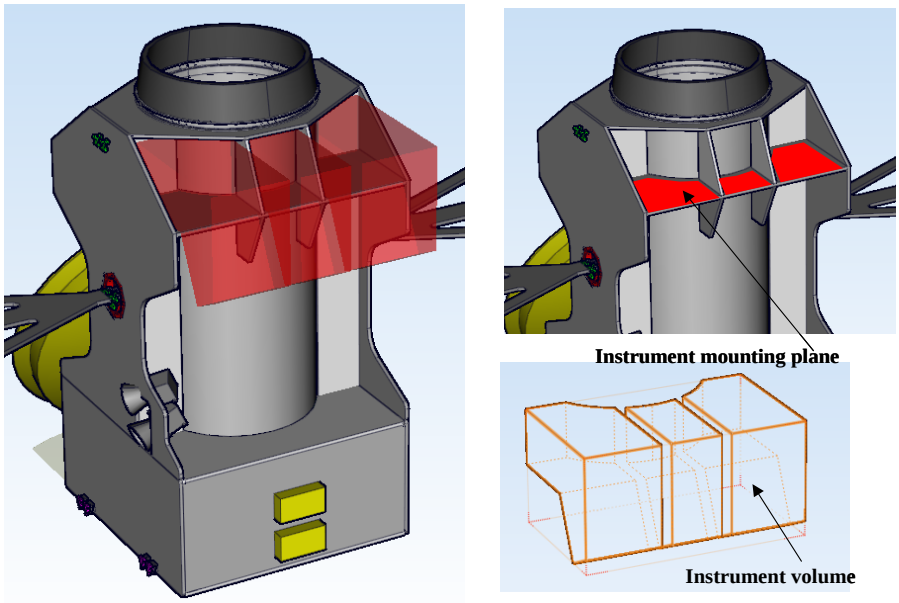

Figure 5.3-2 Sun deck accommodation

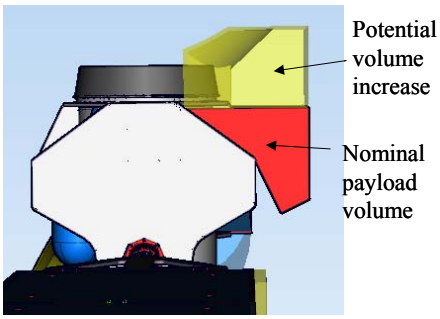

Figure 5.3-3 Sun deck side view

The proposed nominal volume (red) provides a potential of increase in height (yellow) that will be assessed on a case-by-case basis.

This additional volume can be used for cryogenic radiators, baffles, or equiv.

In case of potential use of cryogenic radiators, the view factor to the central tube of the spacecraft needs to be taken into account.

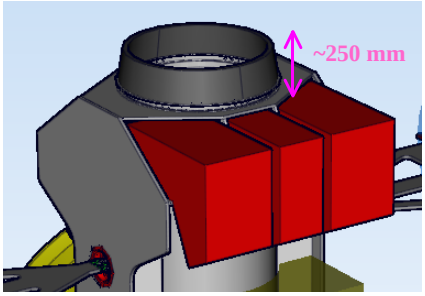

Figure 5.3-4 Sun deck oblique view

Interface plane modification on the Sun Deck may be considered if sufficiently justified by the Instrument Provider, and if quantification of any resource impact is provided.

For more detailed drawings and dimensions of the instrument accommodation see Appendices A2 6.2.2 and 6.2.3.

5.3.3 Mechanical Requirement for Nadir Deck Payload

Global view of Nadir Deck payload accommodation

The nadir deck payloads proposed volume is limited by :

- the spacecraft central tube
- the spacecraft shear panels surrounding solar array mechanism
- the deck size.

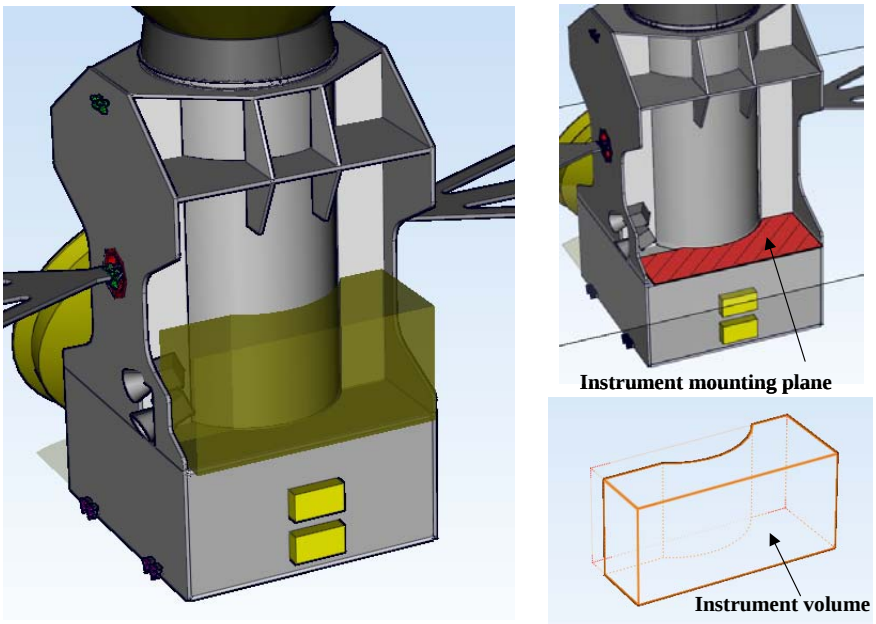

Figure 5.3-5 Nadir deck accommodation scheme

The proposed volume presents a potential of increase in height (+X-direction) that that will be assessed on a case-by-case basis.

For more detailed drawings and dimensions of the instrument accommodation on the Nadir Deck see Appendices A1.2.2 and A1.2.3.

5.4 Platform Pointing Performance

Orbiter platform pointing as function of orbital movements is described in section 5.5 which follows. If instruments need pointing strategies beyond the platform movement, they shall provide all needed pointing mechanisms.

In the following sub-sections the major pointing error contributions are outlined.

5.4.1 Relative Pointing Error (RPE)

5.4.1.1 Short term Stability during HR imaging

Considering the evaluated impact of the selected reaction wheels added to the GNC control law error, it turns out that with the present uncertainty on the Exomars Orbiter bus structure definition, the expected impact on the HR imager stability is likely to be around 0.6 to 0.9 µRad depending on the integration time (from 43 ms to 128 ms).

This performance is achieved with several operating constraints aiming to reduce all sources of disturbances during the imaging sequence around the Mars Orbit:

-Wheels unloaded just prior imaging session

-Solar Array Drive Mechanism and Antenna Pointing Mechanism stopped during imaging session

-Any payload mechanism shall be stopped during imaging session

-no active cooler operating during imaging session

It is recalled that the present technical assessment is very preliminary and is thus TBC.

5.4.1.2 Long Term stability during Sun occultation

The main contribution to long term stability are thermo-elastic distortions and thermal snap effects, whose analyses are not yet available (TBD).

5.4.2 Absolute Measurement Error

Star Tracker level (in star tracker functional frame) a-posteriori measurement error is estimated to be about 170 µrad (3 sigma).

No provision for thermo-elastic error accounted in this figure (depending on star tracker accommodation and final structure definition).

For this budget the contribution of the total star tracker bias is 90 µrad, any in-flight calibration of the star tracker (e.g.: wrt. to an optical P/L imaging star) may allow to improve this budget.

5.4.3 Absolute Pointing error

Outside of reaction wheel unloading phase, 0.5 mrad absolute pointing error wrt. reference ground defined guidance profile is considered achievable.

Note: Reaction wheel unloading will occur typically once per day, timing to be phased with high resolution imaging.

5.5 Platform Pointing Law during Science Phase

The selected orbit for the science mission of Exomars has the following parameters :

- Circular orbit 120min (40min max eclipse)
- Altitude 400 km
- Inclination 74 deg

The Exomars orbiter bus implements during science phase three pointing strategies, described in this section :

- Sun inertial pointing during sunrise and sunset (during 300sec each TBC) to allow sun occultation measurements
- Nadir pointing on the whole remaining part of the orbit with yaw steering strategy, called routine pointing
- Fixed Nadir pointing only during High Resolution imaging sessions

The instruments shall provide all pointing mechanisms needed beyond the platform movement described above.

5.5.1 Routine pointing

Except during high resolution imaging and Sun occultation measurement the platform pointing law ensures that:

- The –Y axis is pointed toward the nadir direction
- The Sun remains perpendicular to the S/C Z axis, however the yaw rate is limited to 1.5 mrad/sec (resulting in a transient Sun elevation above the +Z/-Z panel, max elevation 18 deg, total duration during one orbit where incidence >0 deg is 1000 sec)

This pointing law, that implements a yaw steering around the nadir axis (-Y), ensures that the +X looking face does not received any direct sunlight (nor during the rate limited phase).

Also the proposed yaw steering allows the Sun occultation P/L to be pointed toward Sun at eclipse entry and exit. This can be achieved by simply tilting the Sun occultation instruments by an angle of ca. 64° deg with respect to to the boresight of Nadir looking instrument.

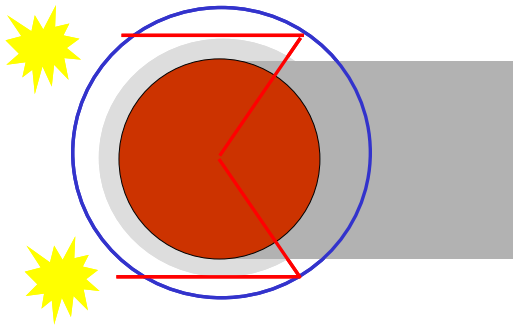

Figure 5.5-1 The angle between nadir direction and Sun occultation boresight depends only on the orbit altitude and on the atmospheric upper altitude for the Sun occultation measurement

$$\alpha = \arcsin\left(\frac{Rm + h_{atm}}{Rm + h_{orb}}\right)$$

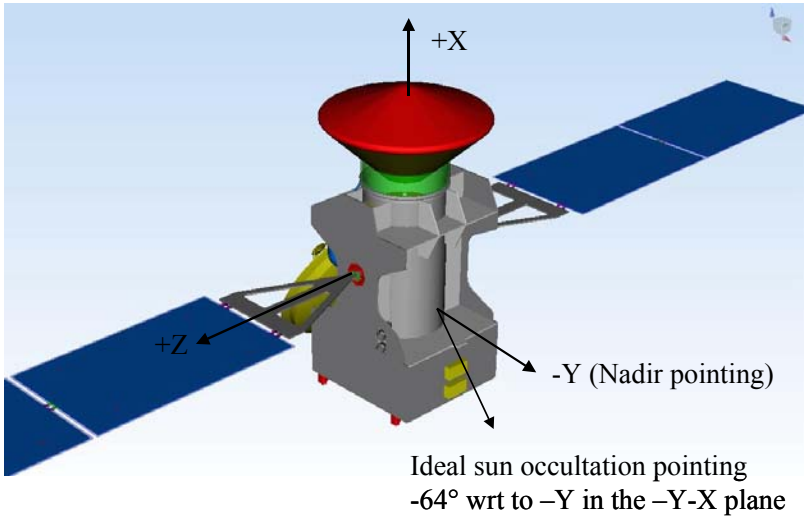

Figure 5.5-2 sun occultation payload orientation

Curves in the following figure show the yaw rate for various Sun inclinations (beta). Note: the unit of the time from sub-solar point is [sec] and not [deg] as indicated on the abscissa axis.

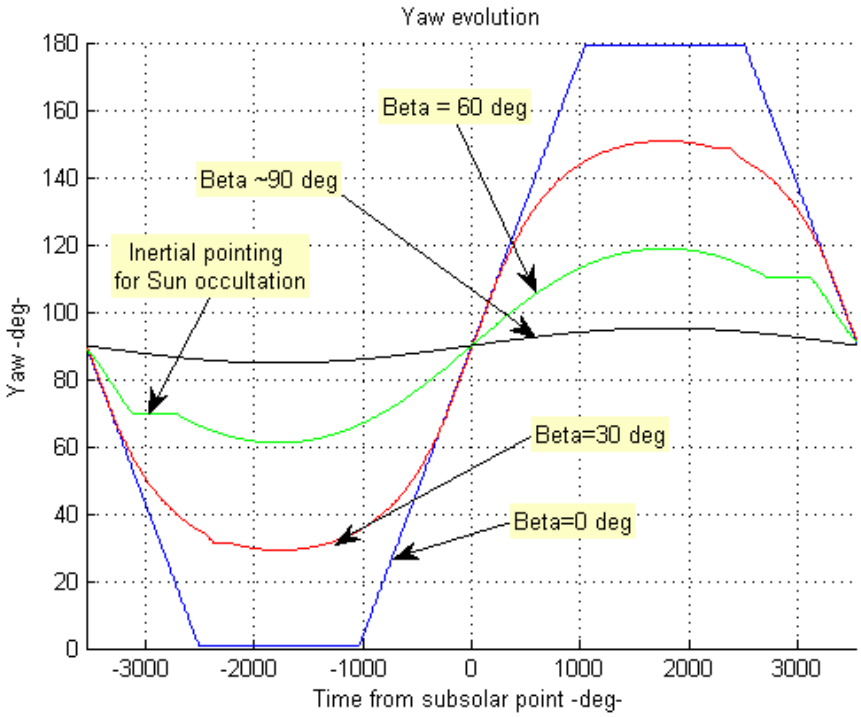

Figure 5.5-3 : Yaw Law for various Sun elevations (Beta). Note: the unit of the time from sub-solar point is [sec] and not [deg] as indicated on the abscissa axis.

5.5.2 Inertial pointing for Sun occultation measurements

During Sun occultation measurements the attitude of the Exomars Orbiter bus is kept inertial at sunrise and sunset. The timeline of this pointing strategy is given hereafter.

Due to this inertial pointing attitude, a small slew needs to be performed (amplitude 6° deg) just after eclipse entry to recover the nominal nadir pointing. In the same way a slew is performed just before eclipse exit to adopt again the inertial Sun pointing.

Another consequence of this inertial sun pointing requirement is that the perfect nadir pointing cannot be maintained during sun occultations. This deviation is limited to a maximum off nadir angle of 6° twice per orbit reached at the end of each sun occultation session meaning just before eclipse entry and about 4min after eclipse.

During inertial phase, Solar Arrays and High Gain Antenna remain Sun and Earth pointed respectively without need of actuation since the spacecraft is inertial.

<u>For the sunset Sun occultation measurement the following attitude profile is applied :</u>

300 sec (TBC) before the start of Sun occultation measurement the yaw and pitch rate are started to be reduced to ensure inertial Sun pointing is achieved 120 sec (for tranquilisation TBC) before starting Sun occultation measurement;

After completion of Sun occultation the nadir pointing/yaw steering profile is resumed, the duration of the transition phase is 180 sec (TBC) and occurs at the very beginning of the eclipse.

<u>For the sunrise Sun occultation measurement the following attitude profile is applied :</u>

300 sec before Sun occultation measurement the yaw and pitch rate are started to be reduced and a slew is implemented to ensure inertial sun pointing 120 sec (for tranquilisation TBC) before starting Sun occultation measurement;

After completion of Sun occultation the nadir pointing/yaw steering profile is resumed, the duration of the transition phase is 180 sec (TBC).

The following figure shows typical evolution of the Exomars orbiter bus attitude during an orbit including sun occultations and HR imaging attitude strategy. In green is the yaw steering attitude (rotation around nadir direction). In blue are indicated slews required for yaw steering law recovery, for accurate position of sun occultation's and for tranquilization. In red are the acquisition sessions (occultation or imaging).

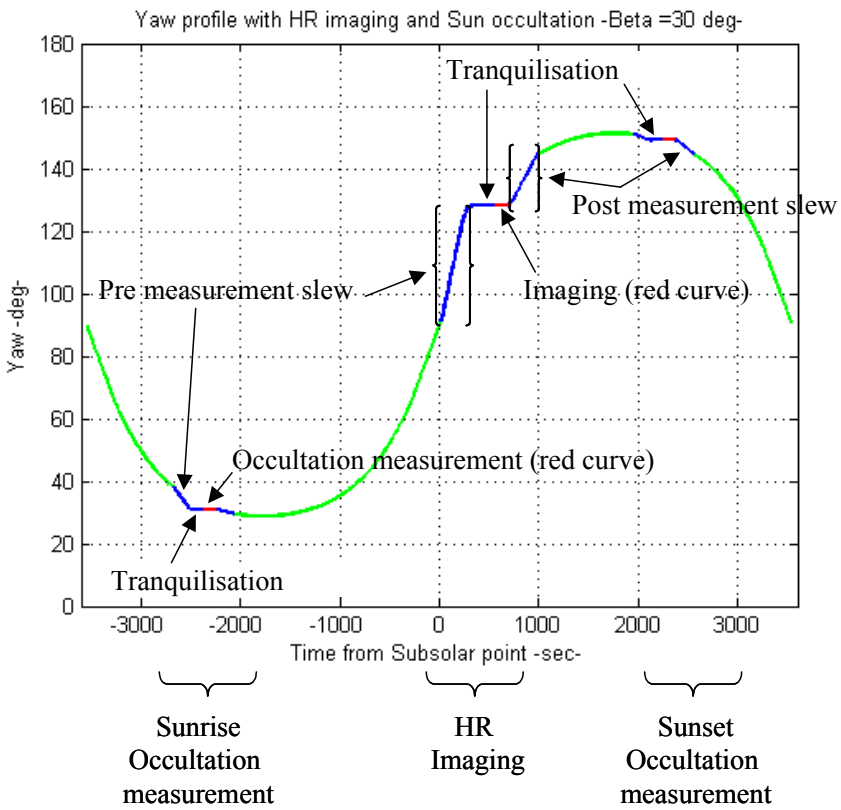

Figure 5.5-4 Orbiter bus pointing law over one orbit for sun elevation over the orbital plane (Beta) of 30°.

5.5.3 Fixed nadir pointing for HR imaging sessions

During HR imaging nadir pointing is maintained while yaw motion is also stopped.

The following attitude profile is applied (see also previous figure):

600 sec before HR imaging, the departure from the nominal yaw profile is initiated to ensure that nearly constant yaw angle is reached 240 sec before the start of HR imaging (tranquilisation time).

During HR imaging the platform follows a small yaw motion (defined by the guidance law) in order to compensate the Mars rotation and keep the detector perpendicular to the ground track.

The benefit of this small yaw is to avoid image blurring due to Mars self rotation during the integration time, and to keep the pointing error within limits as specified in 5.4.1.1.

However it is made clear that this small yaw motion does not replace the required instrument internal mechanism to position the Imager TDI detector perpendicular to the orbiter bus motion prior to image acquisition. See sub-section 5.4.1.1 for short-term stability during HR imaging.

After completion of HR imaging a slew is performed again to reacquire the nominal yaw steering profile.

During the pre imaging slew and post imaging slew yaw rate can exceed 1.5 mrad/sec.

The following plots illustrated the orbit bus pointing strategy in cases of sun elevation of 60° (left curve) and 0° (right curve). The colour code is identical to the previous figure.

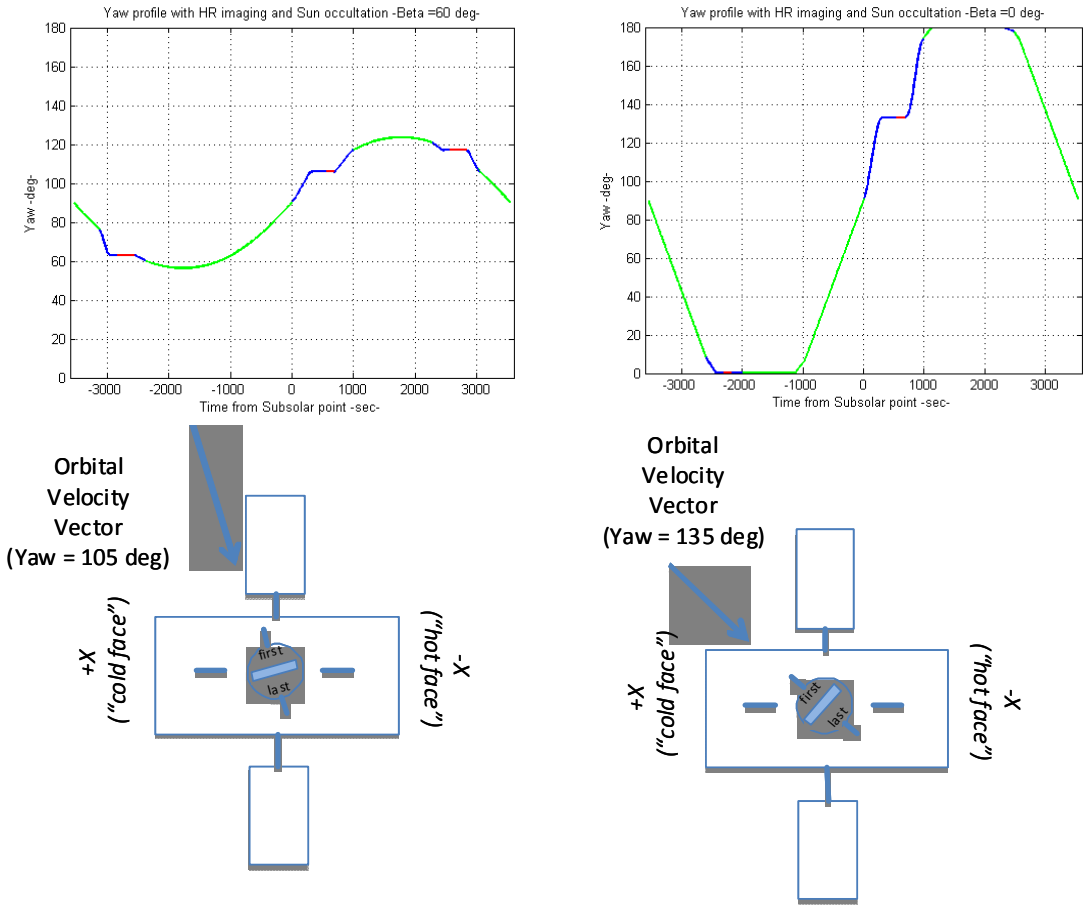

Figure 5.5-5 Orbiter bus pointing law over one orbit for sun elevation over the orbital plane of 60°(left) and 0°(right). The lower panels show cartoons of the spacecraft as viewed from below (the Mars surface) for the respective cases shown in the top panel. Note the notional instrument TDI detector re-oriented with respect to instrument velocity vector for these yaw case using instrument internal capabilities.

5.5.4 Limb pointing capability

This section assesses the « trajectory » on the mars surface of the point targeted by a limb pointing instrument taking into account the yaw steering law followed by the platform.

This assessment is done in two steps:

- First the "trajectory" is computed and drawn for a single orbit showing clearly the effect of the combination of the orbital motion and of the yaw steering. These simulations are done for discrete cases of Sun elevation with respect to the orbit (0/30/60/90 deg) and also for different orientations of the limb pointing instruments in the spacecraft (SC) frame.
- In a second step a complete Martian year simulation is done, taking into account the yaw steering but also the evolution of the Sun orbit geometry over time. The objective being to assess how the whole planet is covered.

5.5.4.1 Limb trajectory

This analysis consists of computing the rate limited yaw steering profile for a given Sun elevation over the orbital point and to derive the point on the planet where a Limb pointing instrument is looking.

The analysis is performed for the following value of Sun elevation above orbital plane (beta angle)

- 0 deg(blue curve)
- 30 deg (red curve),
- 60 deg (green curve)
- 90 deg (black curve)

The analyses have been reiterated for different pointing directions of the limb instrument in the Orbiter bus reference frame :

- towards + X (Phi =0 deg)
- towards +Z (Phi=90 deg)
- towards -X (Phi =180 deg)
- towards –Z (Phi = 270 deg)

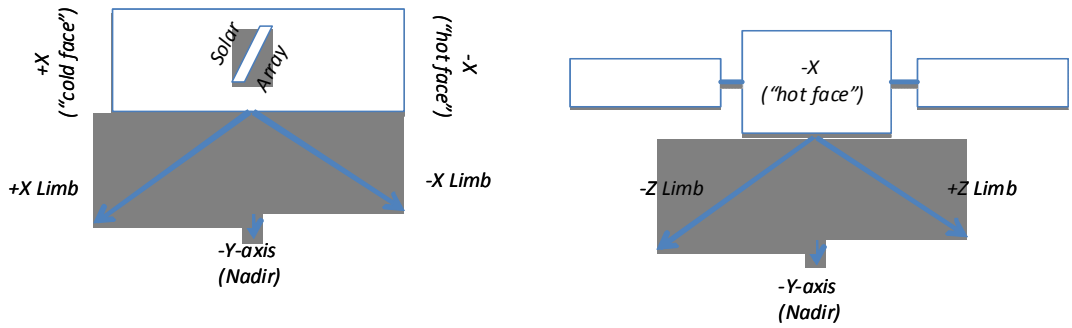

Figure 5.5-6 Orientation of limb view in spacecraft coordinate axes are shown in these cartoons. Also refer to sub-section 5.3.1 for spacecraft drawings

In any case the instrument track is bounded within a band of about 26 deg with respect to the orbital plane. It is simply the angular distance between the Sub-satellite point and the point at the limb which depends only of the orbit altitude and is given by $\arccos\left(\frac{R_m}{R_m + H}\right)$ and is equal to 26.5 deg.

For an Instrument looking toward +X or –X the track is on only one side with respect to the orbital plane while for +/-Z looking instrument the whole band is crossed.

The amplitude of the motion reflects the amplitude of the yaw motion and is maximum when the Sun is at a low elevation.

The effect of a rate limited phase is clearly visible for Sun elevation 0 deg.

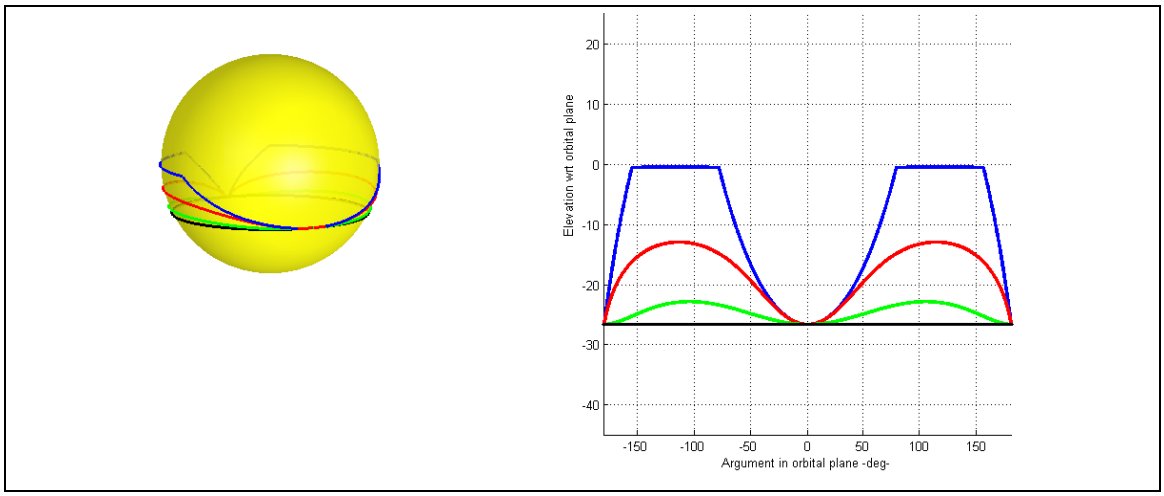

Trajectory of observed point +X Looking instrument

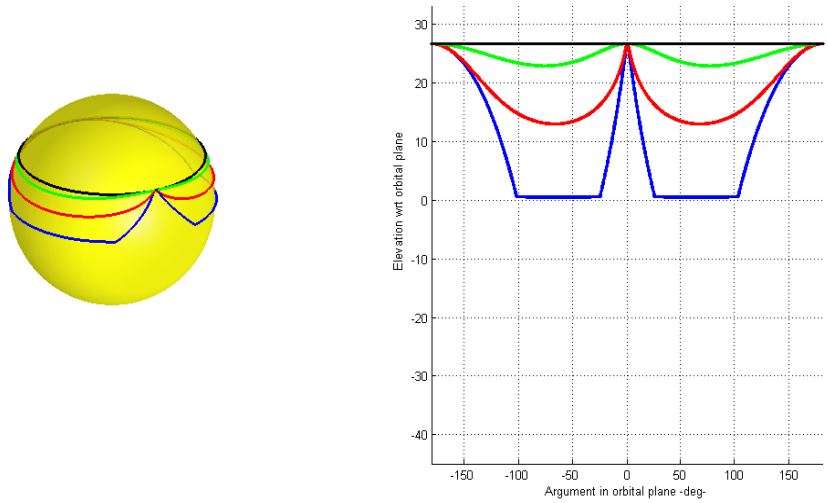

Trajectory of observed point -X looking instrument

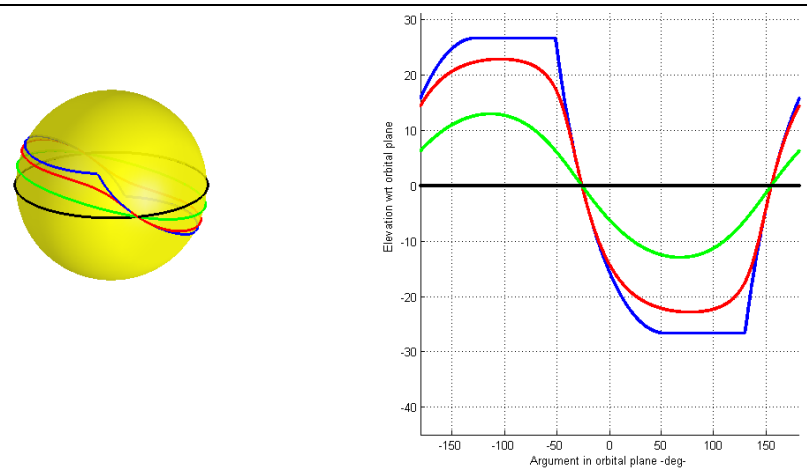

Trajectory of observed point +Z looking instrument

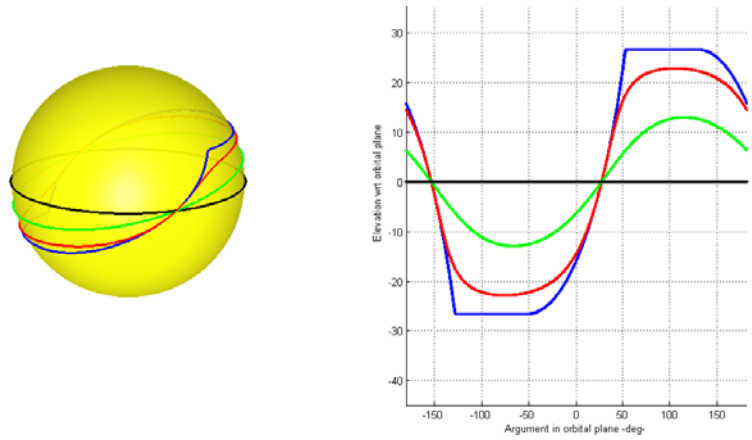

Trajectory of observed point -Z looking instrument

Figure 5.5-7 Ground trajectory of observed point for different instrument looking directions. The orbital plane of the spacecraft always corresponds to the equatorial plane of the 4 graphs, and is not shown.

5.5.4.2 Limb coverage

This analysis consists in computing the map on Mars surface of the points targeted by limb instrument during yaw steering over a full Martian year taking into account the day to day evolution of the orbit (Keplerian+J2) and of the Sun.

The initial orientation of the orbital plane is arbitrary, however since the precession of the orbital plane is much faster than the rotation of Mars around the Sun this doesn't affect the generality of the result.

The resulting longitude/latitude map of the observed points (the ground track under the part of the atmosphere that is being observed) verifies that there are no holes in the coverage after about one Martian year.

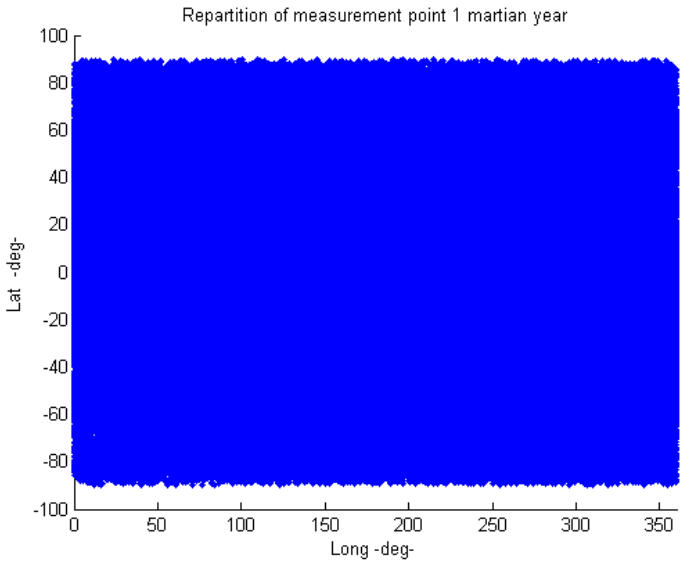

Figure 5.5-8 One martian year simulation, distribution of observed point on planet

This analysis is also presented as :

- The density of measurements as a function of the latitude. More precisely the presented plot shows the average duration of an observation per square kilometre in the considered latitude band. It shows especially that the polar region is covered -in average- with a good density of measurement.
- The extrema of the covered latitude on a given orbit as a function of the time in the mission. It shows especially that the latitude band [-47 deg / +47 deg] is covered daily. Outside of this band (especially in the polar region) the revisit time remains lower than 75 days.
- Ground track of the observed point for a full day. The plots are presented for four cases of Sun elevation with respect to the orbital plane (0deg / 30 deg / 60 deg/ nearly 90 deg). These plots show that for a given day, all the longitudes are covered, but as said before the coverage of the high latitude zone is not possible every day.

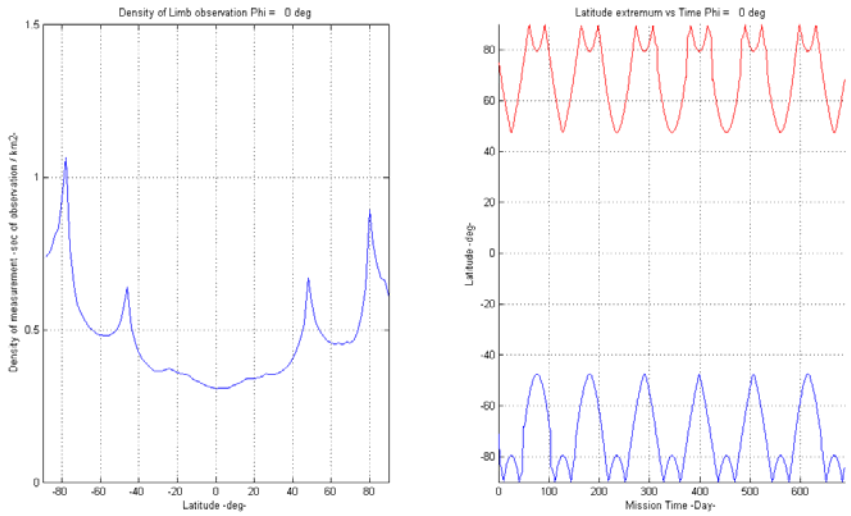

Figure 5.5-9 +X looking Limb instrument : Histogram of the latitude over the mission & evolution of minimum and maximum latitude

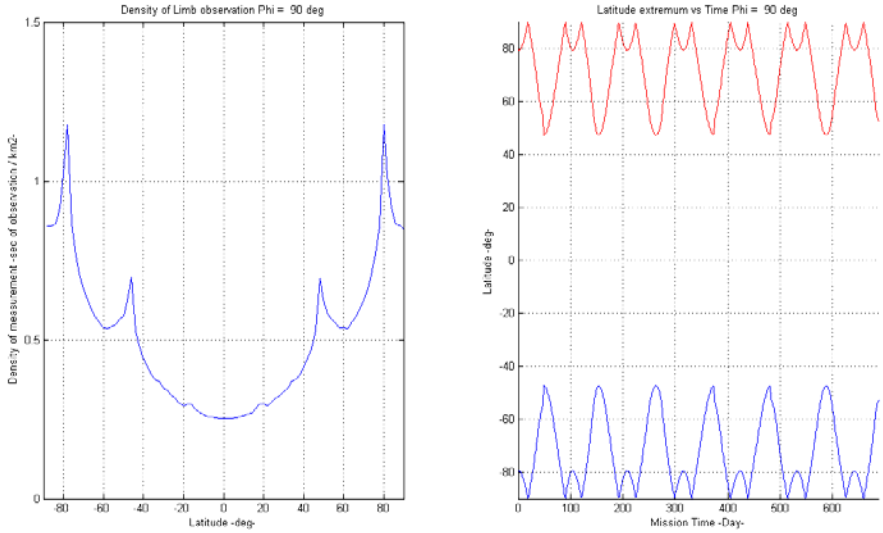

Figure 5.5-10 +Z looking Limb instrument : Histogram of the latitude over the mission & evolution of minimum and maximum latitude

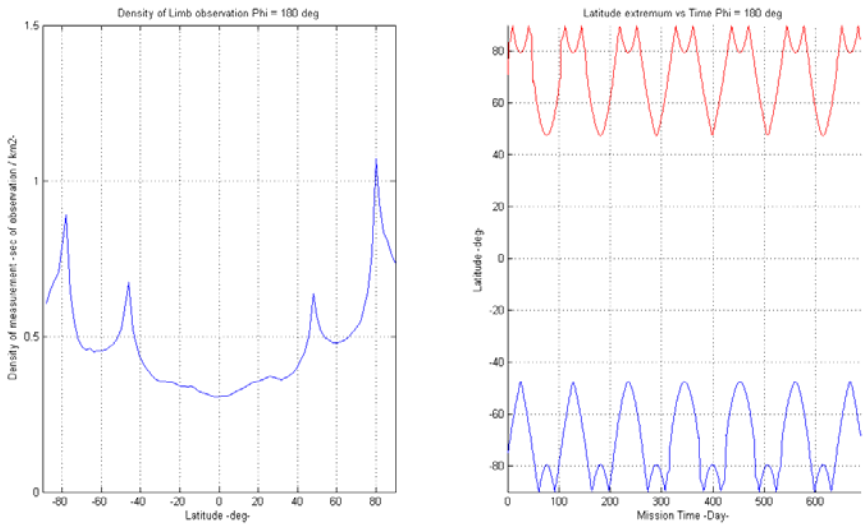

Figure 5.5-11 -X looking Limb instrument : Histogram of the latitude over the mission & evolution of minimum and maximum latitude

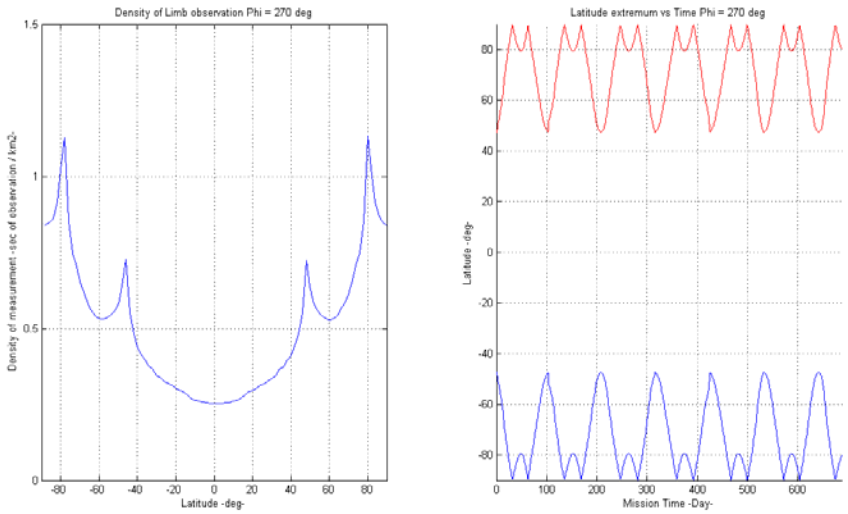

Figure 5.5-12 -Z looking Limb instrument : Histogram of the latitude over the mission & evolution of minimum and maximum latitude

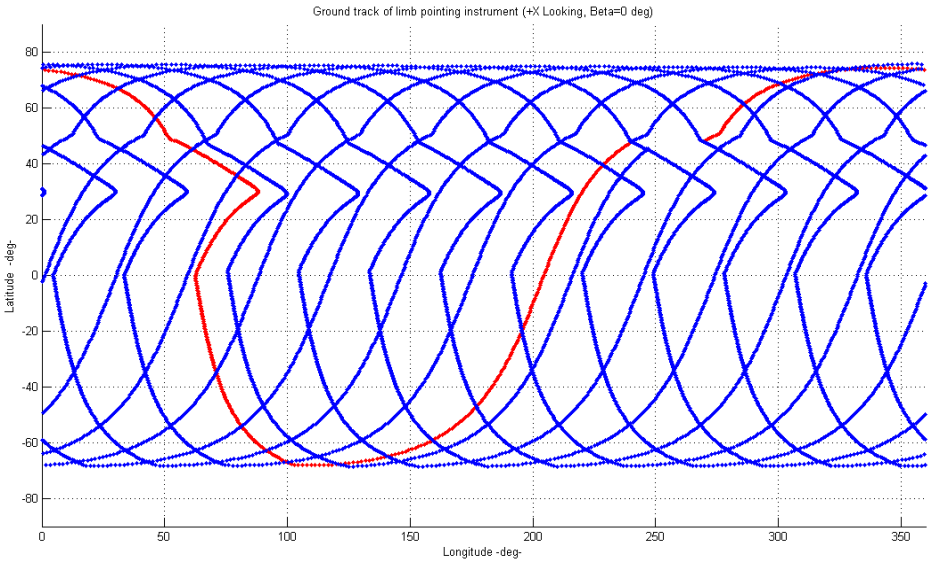

Figure 5.5-13 Ground track of observed point 1 day, 0 deg Sun elevation , +X Looking instrument (the first orbit in red the others in blue)

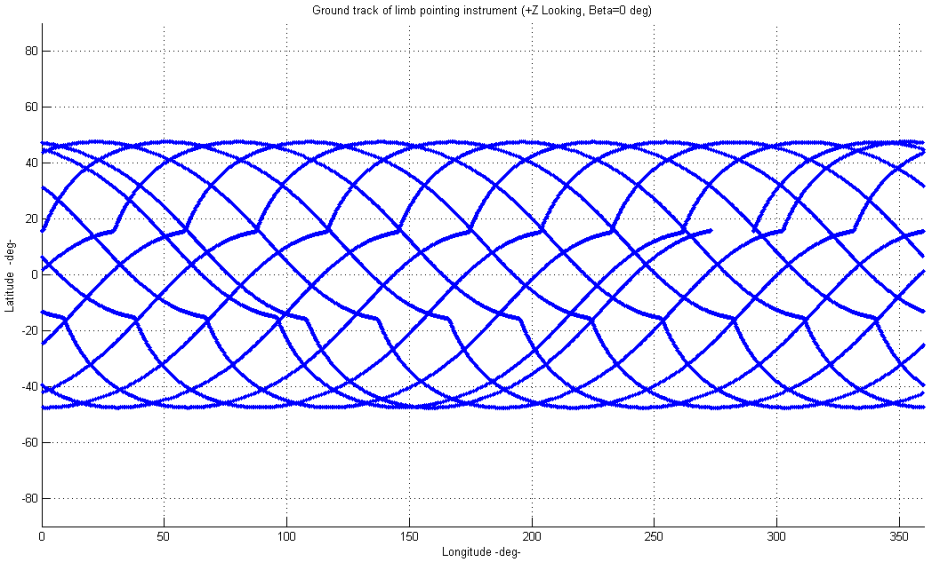

Figure 5.5-14 Ground track of observed point 1 day, 0 deg Sun elevation , +Z Looking instrument

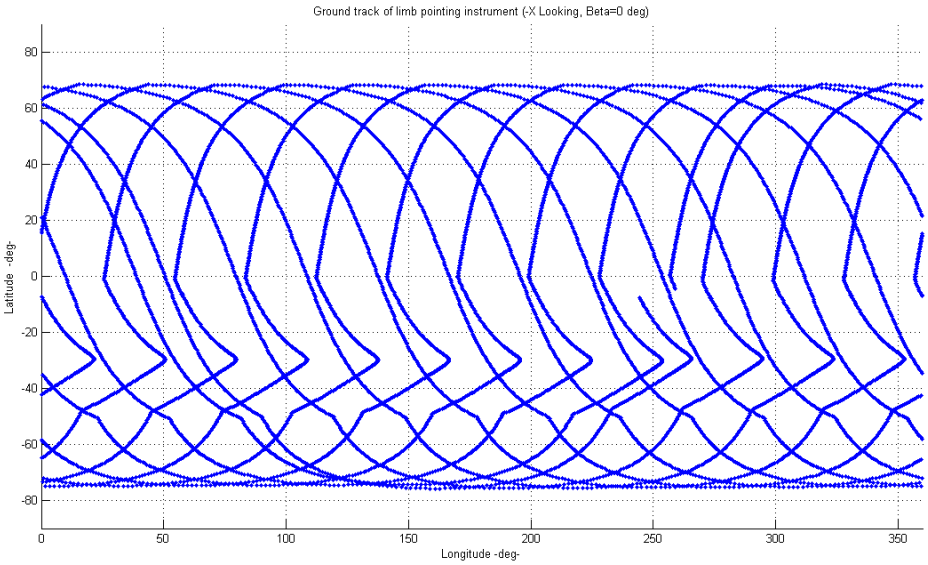

Figure 5.5-15 Ground track of observed point 1 day, 0 deg Sun elevation, -X Looking instrument

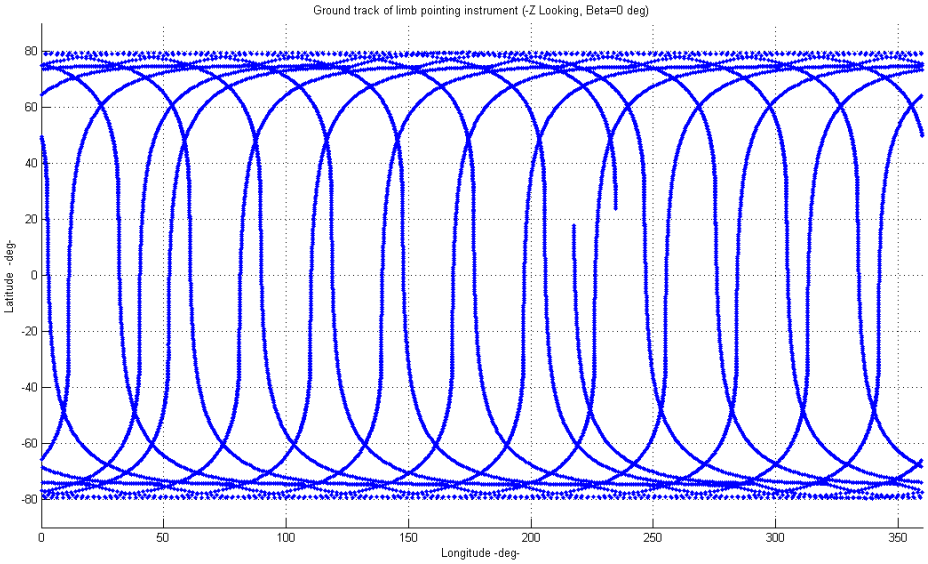

Figure 5.5-16 Ground track of observed point 1 day, 0 deg Sun elevation , -Z Looking instrument

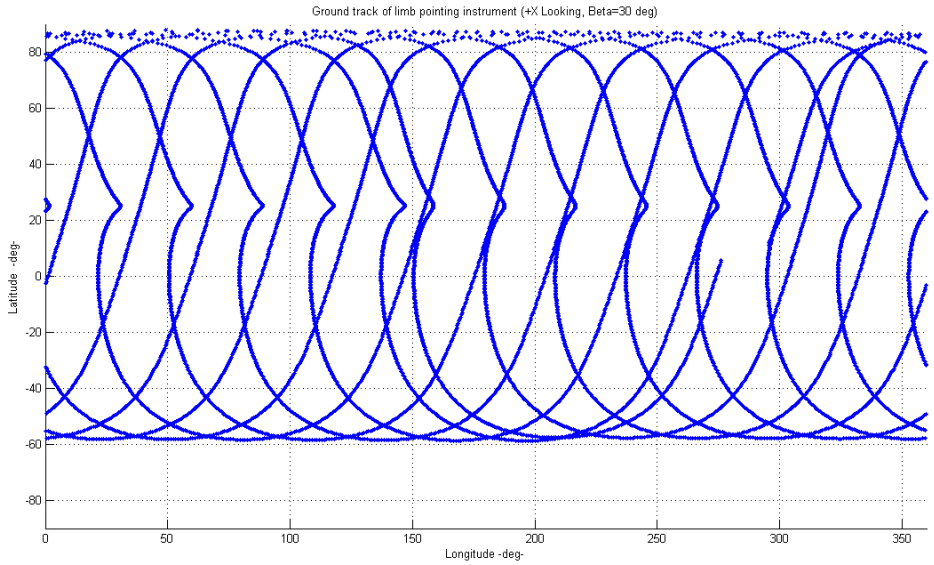

Figure 5.5-17 Ground track of observed point 1 day, 30 deg Sun elevation , +X Looking instrument

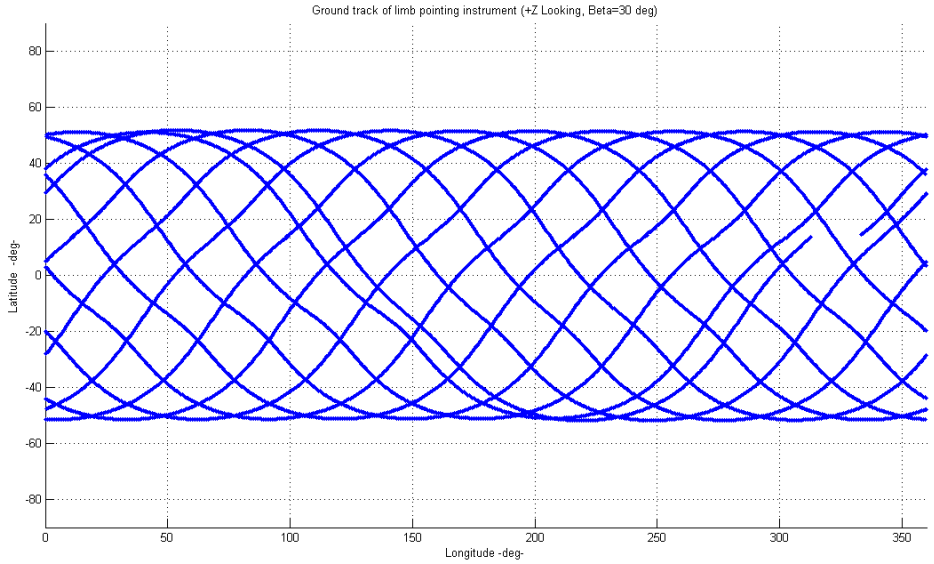

Figure 5.5-18 Ground track of observed point 1 day, 30 deg Sun elevation , +Z Looking instrument

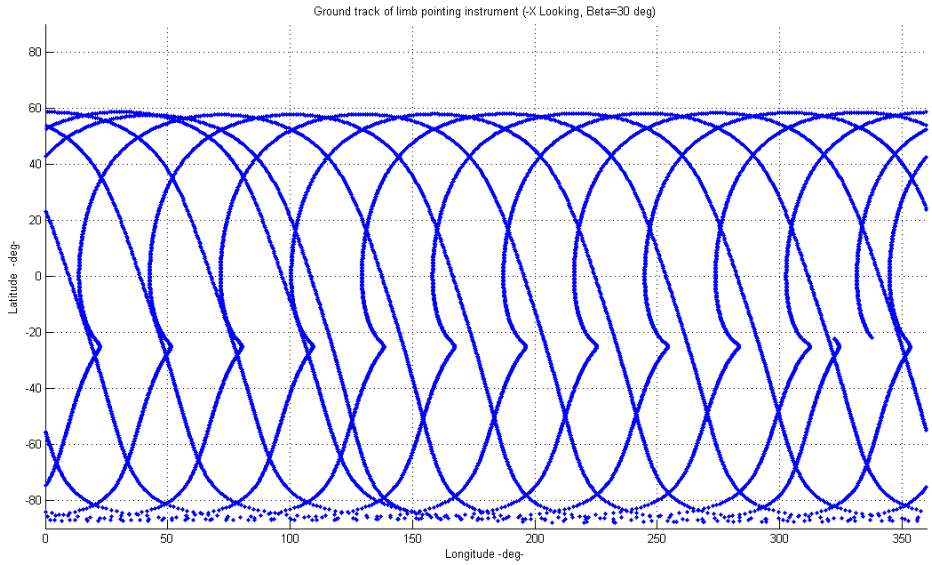

Figure 5.5-19 Ground track of observed point 1 day, 30 deg Sun elevation , -X Looking instrument

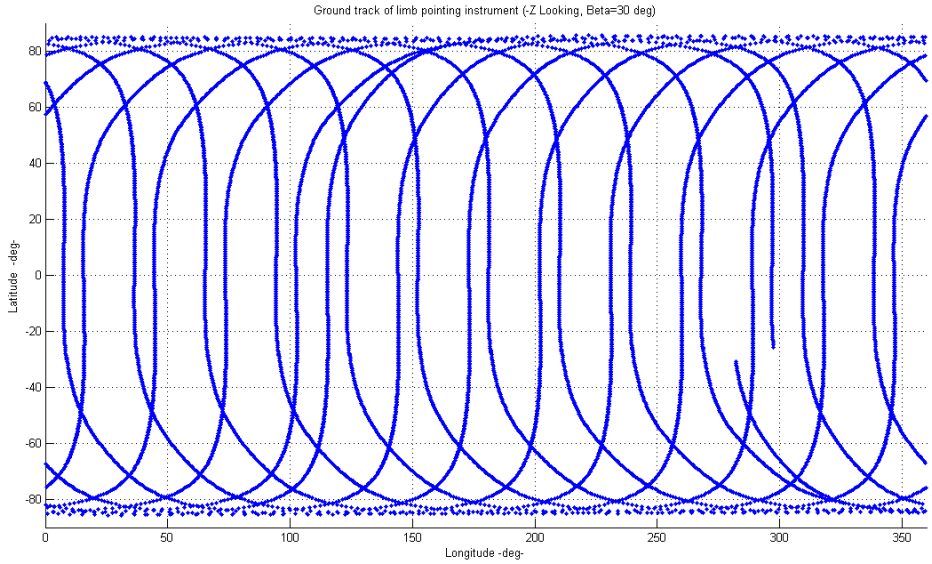

Figure 5.5-20 Ground track of observed point 1 day, 30 deg Sun elevation , -Z Looking instrument

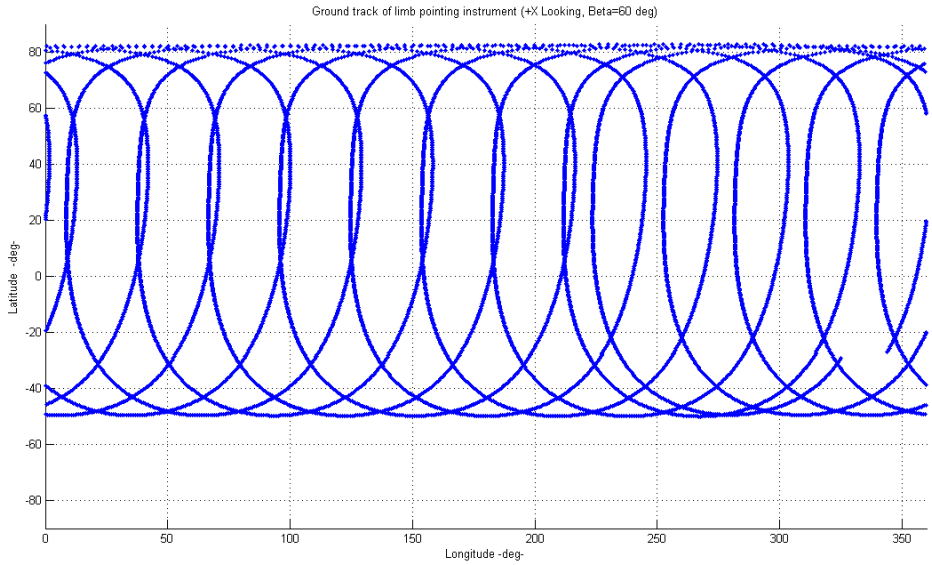

Figure 5.5-21 Ground track of observed point 1 day, 60 deg Sun elevation , +X Looking instrument

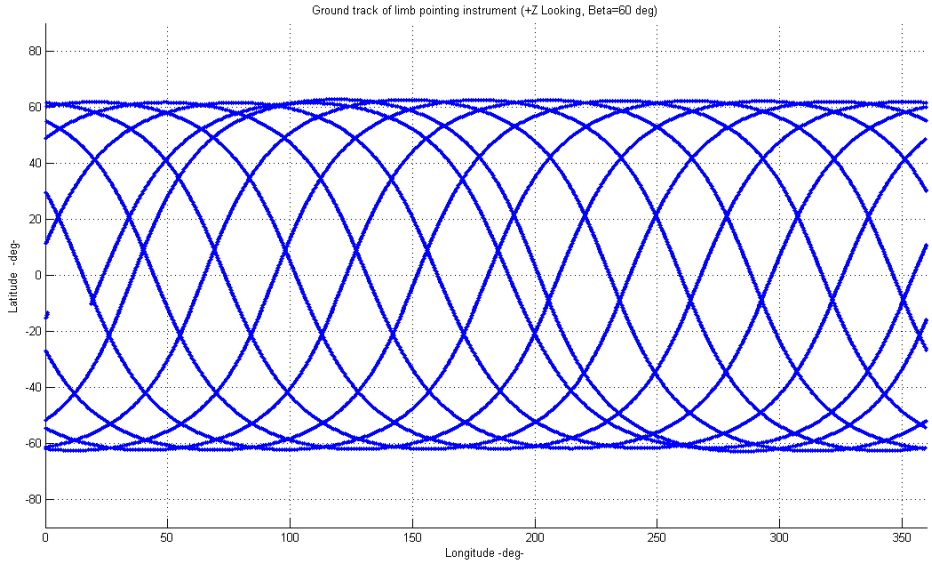

Figure 5.5-22 Ground track of observed point 1 day, 60 deg Sun elevation , +Z Looking instrument

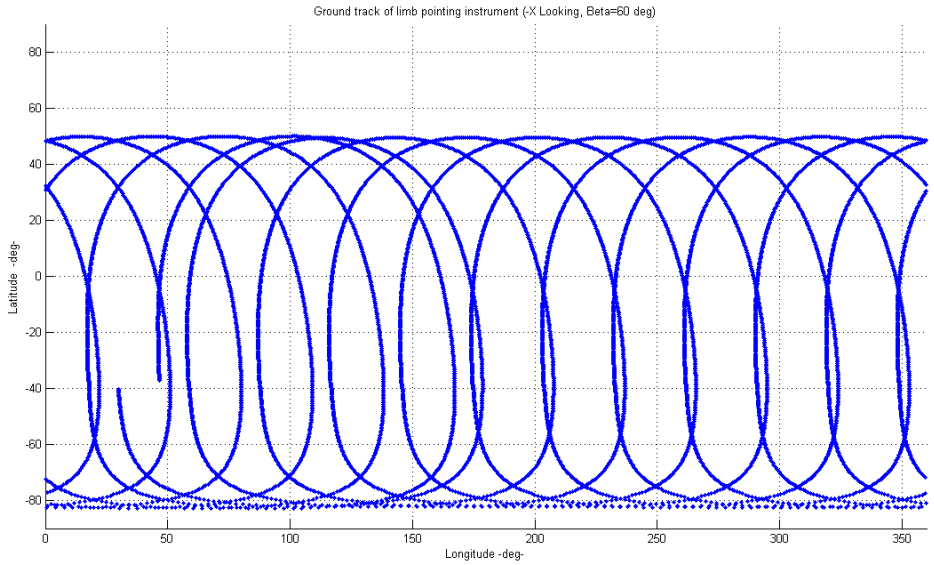

Figure 5.5-23 Ground track of observed point 1 day,60 deg Sun elevation , -X Looking instrument

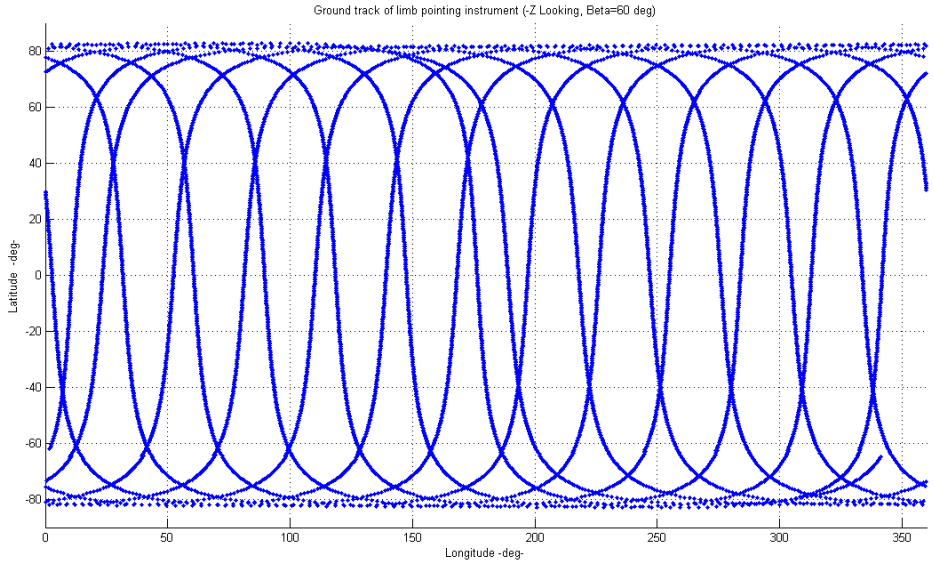

Figure 5.5-24 Ground track of observed point 1 day, 60 deg Sun elevation , -Z Looking instrument

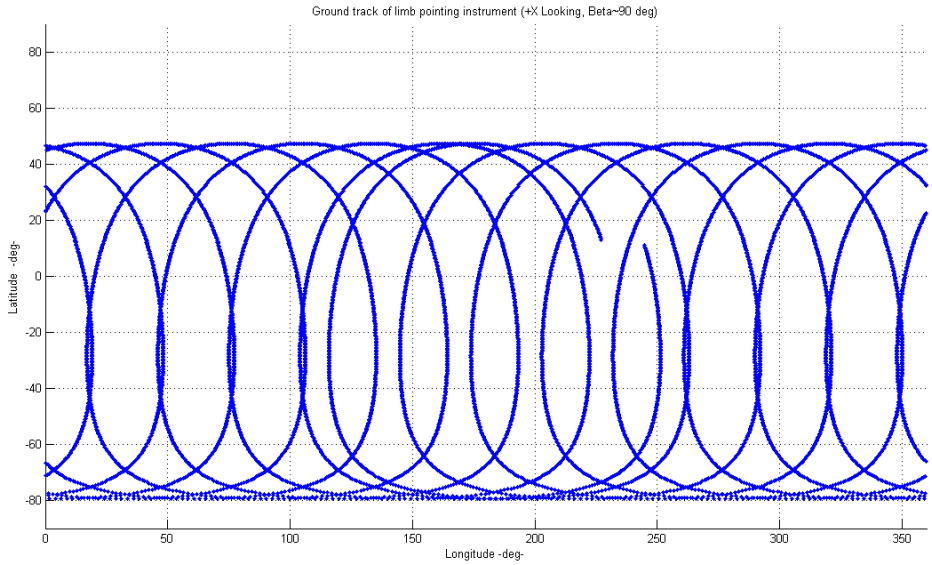

Figure 5.5-25 Ground track of observed point 1 day, 90 deg Sun elevation , +X Looking instrument

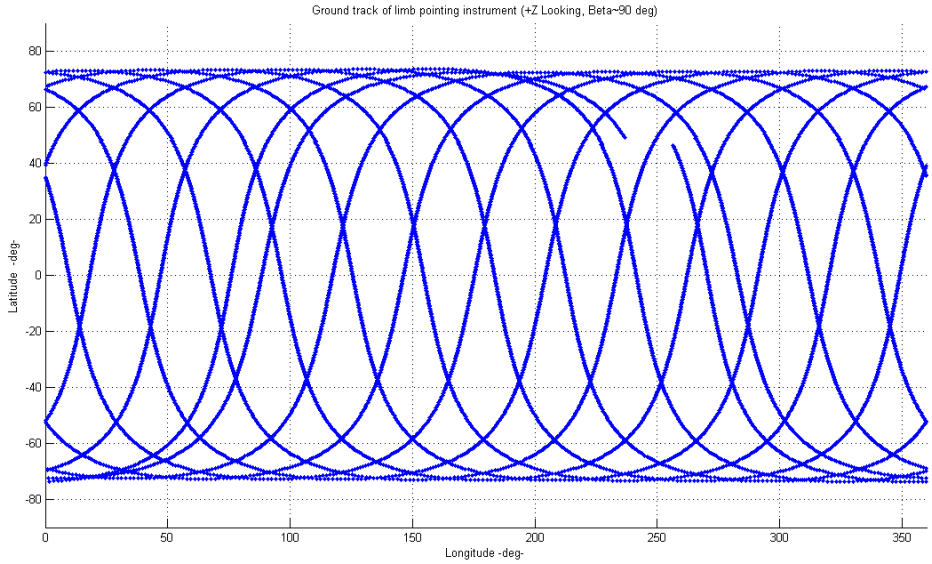

Figure 5.5-26 Ground track of observed point 1 day, 90 deg Sun elevation , -X Looking instrument

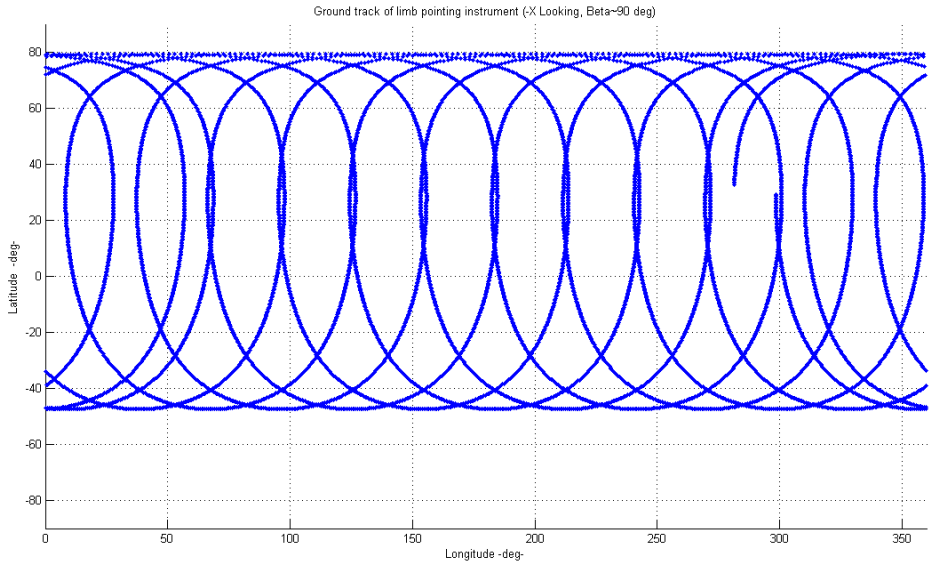

Figure 5.5-27 Ground track of observed point 1 day, 90 deg Sun elevation , -X Looking instrument

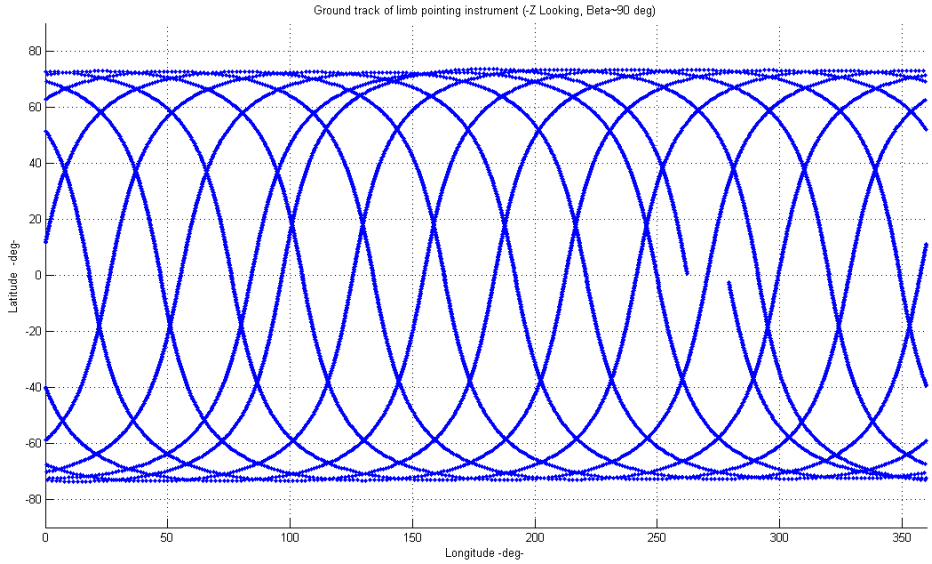

Figure 5.5-28 Ground track of observed point 1 day, 90 deg Sun elevation , -Z Looking instrument

5.6 Power

The total power demand for all of the Instruments averaged over one orbit (120 minutes) shall be 190 W maximum, including Instruments thermal control power needs and maturity margin, which shall be applied as follows:

- 5% of the current best estimate for recurrent units
- 10% of the current best estimate for modified units
- 20% of the current best estimate for new units

Note: the 190W figure (compatible to SA and battery capacity) is the sum of all instruments power demand with corresponding timeline, averaged over 120 minute orbit.

Peak power during the 40 min of eclipse phase shall be limited to 190W.

The total power available to the set of instrument substitution heaters will be 50W in phases during which the instruments are switched off. Survival heaters should not require more than 25-30% of the instrument's own average power.

As suggested in the Joint Instrument Definition Team (JIDT) Final report, the total power of 190 W will be allocated among several instruments.

5.7 Data Downlink

Available data per day at max Earth-Mars distance with dual NASA DSN ground station coverage (16h coverage) is 4.8 Gbits/day.

The average data volume per day over one Mars year is about 8 Gbits/day (TBC).

As suggested in the Joint Instrument Definition Team (JIDT) Final report, the data volume is to be shared among several instruments.

5.8 Computational Resources

The maximum transfer data rate to the management unit mass memory is 1 Mbits/s.

For further details see Appendix A1.5.5.

5.9 Aerobraking

Prior to the Science mission phase the SC will undergo an aerobraking phase of duration of 6 to 9 months.

Instruments must be designed to survive this environment (considering a factor of 2 on the flux due to atmospheric variability) which may include the use of blanketing, coatings or deployable covers.

The nominal direction exposed to the aerodynamic flux is the –X face (launcher I/F), however attitude oscillation 10-20 deg (TBC) are likely to occur exposing the nadir face obliquely to the flux during each aerobraking atmospheric pass Portion of Intruments extending beyond the mounting deck will receive the full flux shown in *Figure 5.9-1*. .

Note that the nominal Sun occultation boresight vector is 26.5 deg from the –X direction in the XY plane (see Instruments accommodation section 5.3).

Aerobraking profile is designed to ensure nominally a peak dynamic pressure of 0.3 N/m2 and a peak dynamic flux of 1420 W/m2 (TBC), however due to the variability of the atmosphere aerobraking with two times this dynamic pressure and flux can occur.

The aerobraking profile is also designed to limit the integral of the dynamic flux over a pass to TBD MJ/m2 (without the above mentioned factor 2 margin). This has the objective of limiting peak temperatures.

In contingency situation the SC can enter the aerobraking arc with any attitude wrt aerodynamic flow, however in this case, thanks to the aerodynamic stability, it will oscillate around the stable position (-X exposed to flux)

The following curve (Figure 5.9-1) show the typical evolution of the aerobraking flux during the aerobraking passes (One pass every 100 passes + the last pass).

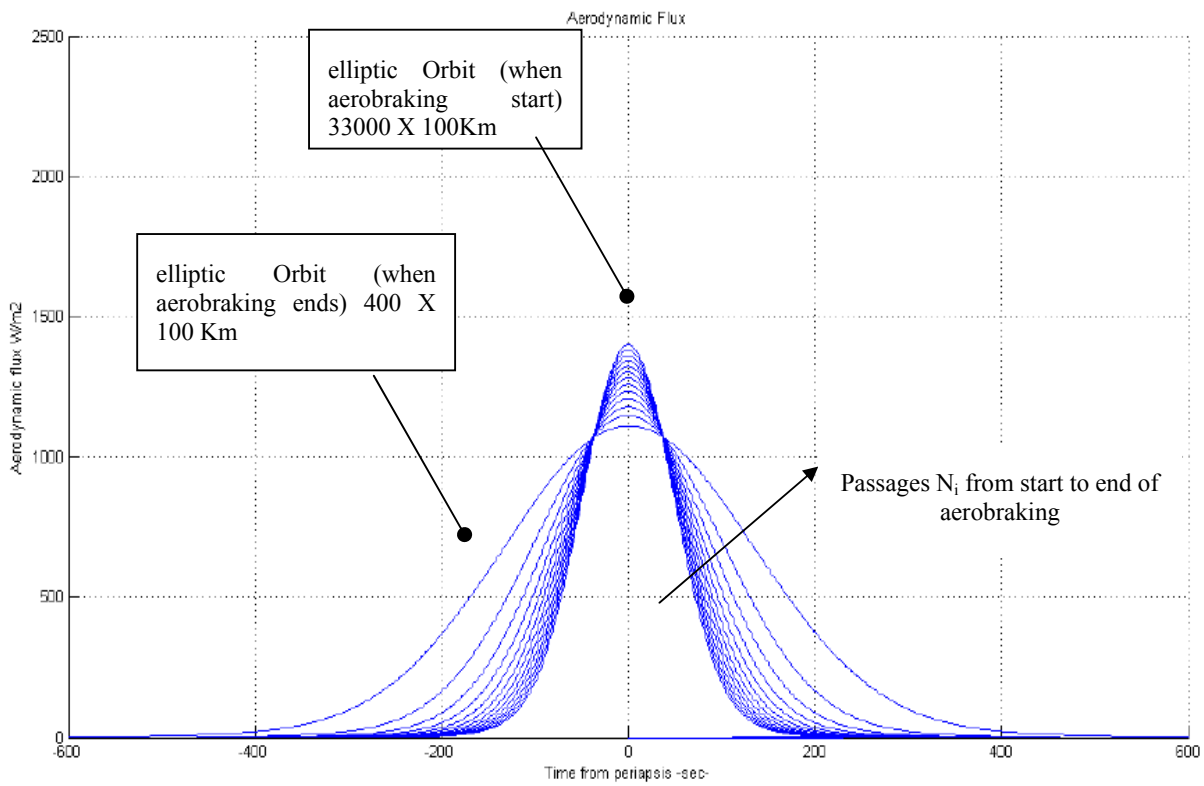

Figure 5.9-1 Aerobraking flux

5.10 Orbiter and Instrument Lifetime

The nominal ExoMars Trace Gas Orbiter lifetime is 7 years. So the Orbiter will be operational till end of 2022, assuming a launch in January 2016.

Orbiter design is compatible with 5.5 years in final circular orbit around Mars and a total in-orbit lifetime of 7 years including Cruise and aerobraking phase.

Instrument design lifetime requirements shall be applied with respect to ground and mission environmental influences and use conditions, as described in Appendix A1.1.3.

6 PAYLOAD AND INSTRUMENT MANAGEMENT

The ExoMars 2016 Orbiter mission is a joint mission between ESA and NASA.

The management of the ExoMars 2016 Orbiter mission is under the responsibility of the ESA ExoMars Project Manager located at ESTEC, Noordwijk, the Netherlands; ESA will design, manufacture, integrate, test, calibrate, and deliver for launch, the ExoMars 2016 Orbiter. Some of the ESA responsibilities will be discharged to a European industrial team led by a Prime Contractor, Thales Alenia Space Italy.

Instruments selected for this mission will be managed in a joint management structure. This section describes the roles and responsibilities of key payload management personnel for the ExoMars 2016 Orbiter mission.

The Instrument Providers will be selected from a variety of institutions, both U.S. and non-U.S., each with unique standards and practices for the management and development of space hardware. All instruments selected shall support the requirements and processes detailed in this E-PIP.

6.1 Roles and Responsibilities

6.1.1 Project responsibilities

The project implementation offices at both JPL and ESTEC will each appoint a Payload Manager.

It is the responsibility of Project Payload Management to oversee and coordinate the individual instrument development programs to ensure compliance to the requirements, policies, and resources of the project.

- For U.S.-led instruments, NASA will manage the development, applying NASA standards, and ESA will manage the interfaces to the spacecraft, applying ESA standards.
- For European-led instruments, ESA will take its usual role vis-a-vis the instrument lead funding agency and the instrument team, and will manage the interfaces to the spacecraft, applying ESA standards.

The ESA Payload Manager will monitor the programmatic and technical progress of the design, development, and verification of instruments provided by ESA participating states.
For NASA instruments, the ESA Payload Manager will monitor the interface compliance and general programmatic issues only.

The Payload Managers shall be the primary programmatic and technical interface between Instrument Providers and the Project.
The ESA and NASA Payload Managers will be responsible, at a minimum, for overseeing the following aspects of the development of each instrument in their purview. The management of these aspects will be done jointly (marked 'Joint') or independently by each agency (marked 'Each'), as applicable, and employing each agency's usual procedures. The Payload Managers will:

1. Be responsible for, in cooperation with the Project Scientists, the overall project interface with the instrument providers, including management, technical and schedule aspects. (Joint)

2. Be responsible for ensuring, in cooperation with the ExoMars System Engineering Manager that all instruments are compatible with the ExoMars Trace Gas Orbiter design that the interfaces are properly defined and controlled, and that sufficient spacecraft resources are allocated. (Joint)

3. Provide the overall technical and managerial leadership for the design, development, manufacture, and delivery of each instrument, in cooperation with the Instrument Providers. (Each)

4. Plan, direct, monitor and control instrument resources, schedule, risk, and performance commitments in fulfilling the instrument objectives. (Each)

5. Establish and approve instrument functional requirements, in cooperation with the Project Scientists, for each instrument. (Each)

6. Establish and approve interface agreements between each instrument and the ExoMars Trace Gas Orbiter. (Joint)

7. Assure that Instrument Providers apply a Product / Mission Assurance program consistent with and acceptable to Product Assurance requirements at and across the interface to the ExoMars Trace Gas Orbiter. (Joint)

8. Assure that Instrument Providers apply a Product / Mission Assurance program consistent with and acceptable to the Funding Agency Product/Mission Assurance program. (Each)

9. Review action items to ensure adherence to project requirements. (Joint)

10. Provide technical representatives and advisors from the areas of instrument engineering, mission assurance, mission operations design, and selected specialists as needed. (Each)

11. Provide managerial and technical leadership to personnel assigned to the Payload Management team. (Each)

12. Provide for the support of the integration of each instrument model with the ExoMars Trace Gas Orbiter. (Each)

13. Assure the quality, accuracy, integrity, and timeliness of each instrument model including its technical documentation, reports and other correspondence. (Each)

Payload system-level issues not specifically covered in the preceding list of responsibilities will be managed by the appropriate members of the ExoMars Trace Gas Orbiter project team in a coordinated fashion.

The ESA Project Team is not responsible for supporting the development of tools/services in the instrument teams' institutes for conducting scientific analysis of their instrument's data.

Some further details of the division of responsibilities within the project between ESA and NASA will be determined with the issue of the ExoMars Trace Gas Orbiter E-IRD.

6.1.2 Project Scientists

ESA has nominated the ExoMars Project Scientist (PS). JPL will appoint a Project Scientist for the 2016 ExoMars Trace Gas Orbiter mission.

The PS's are responsible for the ExoMars 2016 Orbiter's overall scientific integrity, and are the Agencies interfaces with the Mars science community. They also represent the Project, its Science Teams, and the Mission Science to the broader science community and to the general public.

The PS's will support the definition of all agreements that are important for the mission's scientific outcome.

The PS's organise independent scientific peer reviews, and science consultation meetings with investigators.

During all phases of the ExoMars 2016 Orbiter mission—from the beginning of the implementation phase until the end of the exploitation phase—the PS's will be responsible for all scientific issues within the 2016 Mission. The PS's will advise the Project on technical matters affecting the Mission's scientific performance and participate in key engineering decisions affecting the scientific performance. In particular, the PS's will participate in the critical analysis of spacecraft and instrument design, performance, and operations with the objective to verify that the 2016 Orbiter mission's scientific objectives can be fulfilled.

The PS's will coordinate the scientific community's participation in and support for to milestone reviews during the project development phase. The PS's will organise meetings with the scientific community to advise on project development issues that may impact the mission's science return; for example, in case a reductions of the instrument mass is necessary. The PS, may also establish ad hoc working groups to address specific mission aspects requiring consultation with the scientific community; for example, to participate in an instrument down selection process.

During the ExoMars Trace Gas Orbiter operations phase the PS's will coordinate the science operations with the spacecraft operations manager, with input from the PIs.

The PS's will ensure an orderly, prompt, and fair implementation of the mission's data exploitation phase, will encourage the creation of multidisciplinary science teams to thoroughly analyse instrument results, and ensure the utilisation of the payload in an integral and holistic manner, facilitating the cooperation among scientists, all with a view to maximising the mission's science return and to promptly publish its results.

The PS's will regularly inform the international scientific community of ExoMars scientific, programmatic, and mission-development progress via Conference presentations, Newsletters, web

sites, press releases, brochures, etc. The ESA ExoMars PS will also contribute to ESA's reporting, to programme stakeholders, on scientific aspects of ExoMars Trace Gas Orbiter. The JPL PS will interact with the NASA appointed Program Scientist and Program Executive in a similar manner.

6.1.3 Instrument Provider Responsibilities

An Instrument Provider (IP) is the ensemble of the Principal Investigator (PI) and the instrument's supporting institutions.

The PI shall bear the primary responsibility for ensuring that the instrument meets the objectives of the selected science investigation and is implemented within the programmatic and technical resource allocations determined at its confirmation.

The PI retains ultimate responsibility for the investigation but may choose IP personnel to have lead responsibility for specific activities.

All instrument teams will report regularly to the Project, and will demonstrate during formal reviews compliance with the ExoMars Trace Gas Orbiter scientific objectives, the applicable spacecraft system constraints, the spacecraft interfaces, and the programme schedule, as defined initially in the Experiment Interface Requirements Document (E-IRD) and then later in the mutually agreed instrument Experiment Interface Control Documents (E-ICDs). The final acceptance of any instruments hardware or software for integration to the spacecraft shall be under ESA responsibility. Compliance to these items in a timely and satisfactory manner is vital for confirmation for flight, jointly approved by ESA and NASA.

6.1.3.1 PI Responsibilities

1. Be the investigation's primary point of contact with other Project elements regarding investigation requirements, schedules, and funds. Represent the team in relevant Project reviews.

2. Participate in the ExoMars Trace Gas Orbiter science team meetings and associated working groups, providing inputs on topics including but not limited to, archiving, science operations, instrument requirements development, and other topics. These inputs may require participation and deliverables from other members of the instrument team, to be coordinated by the PI.

3. Develop an Experiment Implementation Plan (EIP) or equivalent defining the approach for completing the instrument development and qualification.

4. Generate and maintain other documentation regarding the investigation.

5. Ensure that the design and fabrication of the instrument and its development and testing are appropriate to the objectives of the investigation and meet the mission environmental and interface constraints.

6. Establish and manage instrument margins to ensure successful hardware integration and implementation of the experiment.

7. Conduct payload reviews as defined in the following subsections.

8. Be responsible for instrument quality assurance, reliability, and selection of parts and materials.

9. Ensure that the instrument development meets the project approved schedules and, if appropriate, cost plans. De-scope the investigation as needed to stay within allocated resources, with approval from the PI, PS and other management personnel.

10. Establish requirements, interface control documents (ICDs) and other documents as required herein and after selection, schedules through negotiations with the project, and establish, as appropriate, transfer of funds through negotiation with the funding authority.

11. Ensure that the instrument is properly qualified and calibrated at instrument level prior to shipment of the Flight Model.

12. Demonstrate that the design and performance of their instruments meet the science and mission requirements as defined by ESA and NASA.

13. Support payload integration, system test procedure development and maintenance, instrument and ground support equipment (GSE) integration, and orbiter system testing at the orbiter contractor and launch site. Some support in situ is required for all of these venues; however remote test support may be acceptable once integration has been established.

14. Support the Mission Operation System (MOS) and Ground Data System (GDS) design teams in a combination of telecons and face-to-face meetings, including:

    a. Participate in project working groups to resolve software requirements and interface issues, resource allocations, and operational timelines.

    b. Participate and support instrument operations related to GDS design activities.

    c. Support the definition of mission operations database contents, including but not limited to, flight rules and constraints, sequences, calibration data, telemetry, and commands.

    d. Support integrated mission data/sequence development and flight software integration, using the orbiter test beds.

    e. Support GDS tests and End-to-End Information System Tests during development and operations phases

15. Support mission operations planning and execution, during flight, as defined in the Experiment Operations Plan (EOP), including:

    a. Specification and verification of observational requests

b. Ground Data System (GDS) integration and verification tests including end-to-end tests

c. Operations test and training

d. Generation and validation of instrument commands, subsequences, and flight software modifications

e. Evaluation of the instrument's heath, safety, and performance in test and in flight, including supporting anomaly resolution

f. Defining and conducting instrument in-flight calibrations

g. Operation and maintenance of the instrument engineering model, if applicable

16. The PI is also responsible for planning and operational support of instrument operation, data analysis, and overall conduct of the investigation.

17. Prepare, certify, and release data products to the Planetary Data System (PDS) and other archives according to the still-to-be-finalized ExoMars Trace Gas Orbiter data management and archival requirements.

18. Negotiate letters of agreement with the relevant Interdisciplinary Scientists (IDS) if selected for mission participation later, regarding the data or results to be provided to the IDS and the release and publication of data and results.

19. Ensure that the reduction, analysis, reporting, and archival of the results of the investigation meet with the highest scientific standards and completeness, consistent with budgetary and other recognized constraints.

20. Ensure development and readiness of tools and services that are required for conducting scientific analysis of their instrument's data.

21. Ensure the timely provision to the ExoMars Trace Gas Orbiter project of each instrument deliverable.

6.2 Communications with ESA, Industry, and Partners

Communications are defined as the exchange of information, which affect technical standards, deliveries, time schedule, costs, or any other instrument relevant aspect of the project.

Communications among the various agencies and scientists will be required to follow the processes described in relevant documentation being prepared by ESA and NASA.

6.2.1 US Export Control Compliance (ITAR)

U.S. Proposers shall comply with all US Export control regulations for exchange of technical data with ESA and its spacecraft contractor. To that end, U.S. proposer institutions shall prepare and complete Technical Assistance Agreements with ESA and its spacecraft contractors, Thales Alenia Space Italy, Thales Alenia Space France, and any other non-U.S. entities with whom they will be sharing technical data.

For investigators proposing joint instrument developments with non-U.S. partners (either U.S.-led or foreign-led), similar agreements must be in place between the U.S. and international partners.

Such agreements must be signed and in place before exchange of technical data between such partners is possible. Therefore, in order to quickly join the ExoMars development schedule, U.S. proposers should plan that the necessary legal work takes place early in their program.

6.3 Schedule

6.3.1 Project Schedule

The following figure illustrates the key project milestones including key instrument deliverables and reviews in the context of the overall project schedule. The scope of the deliverables and reviews shown on this schedule are elaborated more fully in the following sections.

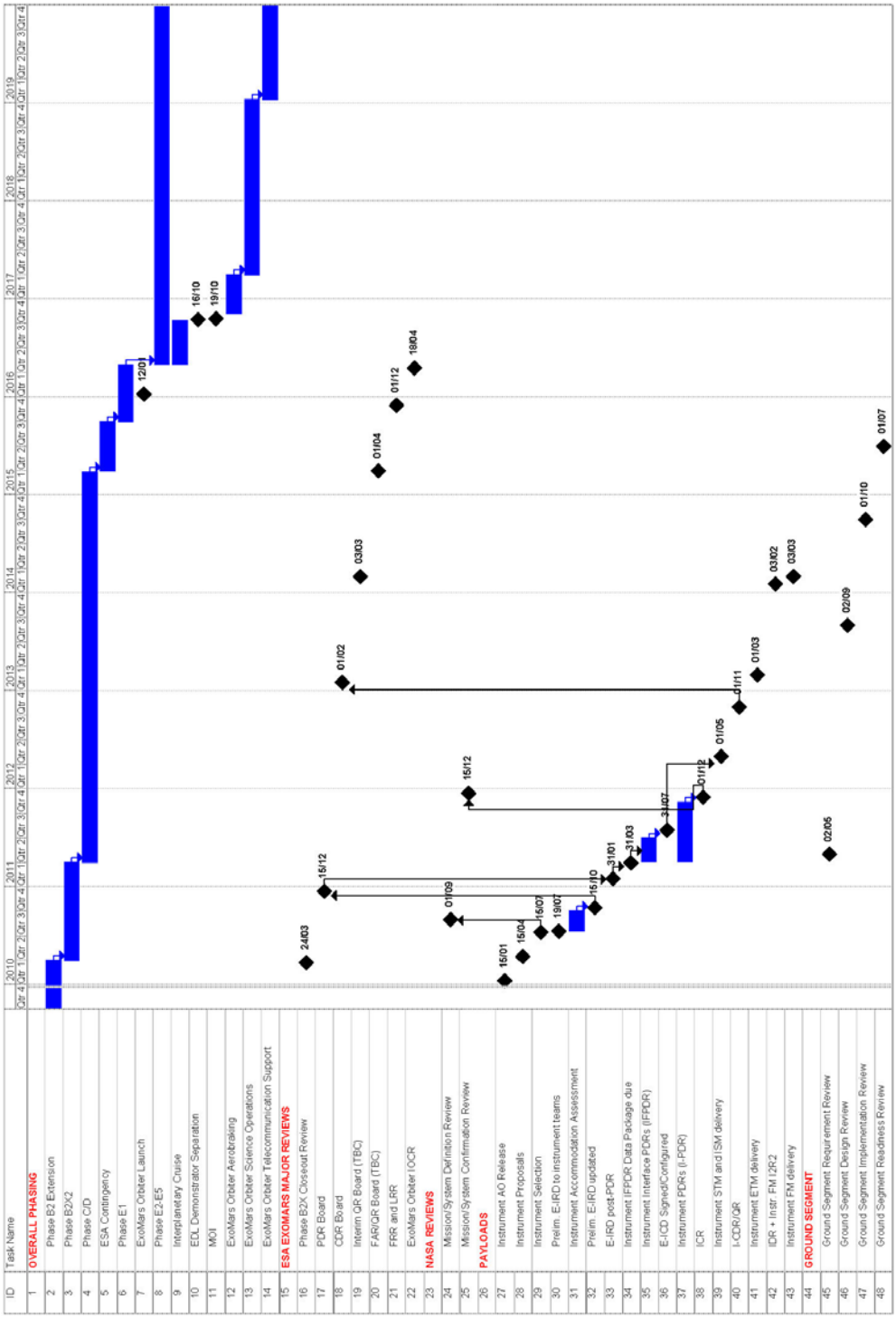

Figure 6.3-1 ExoMars Project Schedule

6.3.2 Flight Instrument Delivery Schedule Margin

Proposals shall show ten weeks of funded schedule margin prior to instrument hardware and software delivery.

6.4 Reviews

The instrument PIs will be expected to support Project design and management reviews for the Project, Orbiter, and Operations systems, as well as occasional informal Project reviews as needed.

At the instrument level, the Payload offices will establish the review board for each instrument that will conduct formal "milestone" reviews of instrument programmatic and technical progress throughout the instrument development. The review board for each instrument shall advise the Project as to the feasibility and adequacy of the instrument plans and progress. Additionally, the Payload Office will meet with the instrument teams on a more frequent basis as needed to understand technical, cost, and schedule progress.

Instrument providers should plan to conduct technical peer reviews prior to milestone reviews to validate approach and design aspects in detail. These peer reviews will be summarized at the milestone reviews.

The following table summarizes the reviews for the investigation that each investigation team is expected to support. Details on some of the more significant reviews are provided in the following subsections.

Table 6.4-1 ExoMars 2016 Orbiter Instrument Reviews

Review Type		**Frequency**
Instrument Level Reviews and Meetings		
	Instrument Accommodation Assessment	1
	Requirements Review	1
	Inheritance Review (if applicable)	1
	Interface Preliminary Design Review	1
	Preliminary Design Review	1
	Instrument Confirmation Review	1
	Critical Design Review / Qualification Review	1
	Instrument Integration Readiness Review	3
	Environmental Test Readiness Review	1
	Instrument Delivery Review	1
	NASA Monthly Management Review	Monthly

	ESA Quarterly Progress Meeting	Quarterly
	Instrument Interface Meetings	As needed
	Peer Reviews (prior to formal reviews)	As needed
Project Reviews (for which instrument support is anticipated)		
	Preliminary Design Review	1
	Critical Design Review	1
	Qualification Review	1
	Ground Segment Readiness Review	1
	Flight Acceptance Review	1
	Flight Readiness and Launch Readiness Review	1
	In-Orbit Commissioning Review	1

6.4.1.1 NASA Monthly Management Reviews (MMRs)

Monthly management reviews of programmatic, financial, and technical status will be held at the instrument provider's site by NASA, with ESA participation on a quarterly basis or as needed. The intent of MMRs is to provide timely insight into instrument progress with minimal impact on work effort.

Major topics to be addressed are:

- Progress during past reporting period vs. plan
- Problems, risks, concerns, and mitigation plans
- Schedule status and variance from baseline
- Cost, including comparison of actual and planned cost and an explanation of any variances
- Procurement and subcontract status
- Financial reports (monthly and quarterly 533 forms)

6.4.1.2 Instrument Interface Meetings (IIMs)

To foster close interactions between the instrument and orbiter system technical personnel, a series of meetings will be scheduled to work out interface issues and document the design in the ICDs. The ExoMars Trace Gas Orbiter Project will host the initial "Kick-Off" meeting at JPL. Some IIMs that follow can become "virtual" meetings, with the instrument provider supporting by a combination of conference calls, video conferences, and e-mails.

These are not formal reviews, but rather technical (only) interface meetings between the instrument provider engineers, the orbiter engineers, and the ESA and JPL instrument interface engineers. The initial focus will be on hardware and software interface issues, but will transition into resource sub-allocation discussions and operational strategies as the launch date approaches.

6.4.1.3 Instrument Accommodation Assessment

Shortly after the instrument selection, each investigation that includes hardware will begin preliminary design activities and prepare to support the instrument accommodation assessment (IAA), which will be convened by the project and held at a central location. The purpose of the IAA is to establish the instrument's compatibility with the orbiter, to formulate a firm commitment with the instrument provider for the Project-supplied resources and interfaces (including, but not limited to, mass, power, volume, fields of view, and environments), including evaluation of interactions between instruments competing for shared orbiter resources. This process will lead to an E-IRD update to be provided as input to both the instrument providers and the System PDR in late 2010.

The Instrument Provider will use the negotiated accommodation information (i.e. the E-IRD) (i) to proceed with the design leading to the Instrument Interface Preliminary Design Review (IFPDR), and (ii) to prepare a draft of the Experiment Interface Control Document (E-ICD).

6.4.1.4 Instrument Interface Preliminary Design Review (IFPDR)

The instrument provider will hold an IFPDR at the hardware developer's location. This review will allow the Project insight into the progress being made in the instrument design and comparison to the planned performance and estimated margins. The IFPDR takes place after the ExoMars Trace Gas Orbiter System PDR.

Following the System PDR an updated E-IRD will be released against which and updated instrument E-ICD versions are to be prepared, in signature-ready form, as primary input for the IFPDR. The IFPDR will evaluate description of interfaces and allocations of orbiter resources. The E-ICDs go under formal change control less than 30 days after the IFPDR, supporting a formal freeze of interfaces with the Orbiter.

6.4.1.5 Instrument Preliminary Design Review (I-PDR)

The instrument provider will hold the I-PDR at the hardware developer's location to complete the preliminary design review process in view of the Instrument Confirmation Review which shall take place by December 2011.

Where the E-ICD is the main focus of the IFPDR, for the I-PDR an Experiment Implementation Plan (EIP), functional requirements document (FRD) and an Instrument Product/Mission Assurance Plan will need, among other document, to be delivered and reviewed. The review will discuss the FRD, testability of the requirements, risk assessment, as well as status of any long-lead procurements. The FRD goes under formal change control prior to the I-PDR.

The instrument provider has the option of completing the I-PDR at the time of the IFPDR.

6.4.1.6 Instrument Confirmation Review (ICR)

The Instrument Confirmation Review is the final step in the selection process by the agencies and, although PIs do not attend or participate directly in this review, the Experiment Implementation Plan and the Instrument Preliminary Design Review results will be key inputs.

6.4.1.7 Instrument Critical Design Review / Qualification Review (I-CDR/QR)

The last design review prior to initiating flight hardware fabrication is the instrument critical design review (I-CDR). The I-CDR precedes the Project critical design review (CDR) at the completion of the instrument detailed design. Topics include status of hardware design, fabrication, test, and calibration, software design and test plans, assembly subcontracts and parts status, plans for integration, description of support equipment, finalization of interfaces, command and telemetry requirements, and discussion of environmental and system tests. The I-CDR includes reports from technical Peer Reviews held in preparation for this review. The findings of the I-CDR will be reported at the Project CDR, with the PI in a supporting role. The instrument flight design must be fully qualified prior to initiating of the build of the Flight Model, and, as such, the agenda of the I-CDR will be expanded to cover the objectives of a Qualification Review. The purpose of the I-QR is to confirm the completeness of all qualification testing of the instrument design. Irrespective of the model philosophy chosen, (Qualification+Flight Acceptance or Engineering Model+Protoflight approach) the I-CDR/QR serves as the gateway to the initiation of the flight model build.

6.4.1.8 Environmental Test Readiness Review (ETRR)

The instrument provider will conduct a Environmental Test Readiness Review (ETRR). The purpose of the ETRR is to demonstrate readiness to proceed with instrument environmental testing. Topics include environmental test plans (thermal vacuum, shock, vibration levels), ambient test results, and status of open anomaly reports and closure of other open engineering issues. Detailed calibration plan and procedures are reviewed at the ETRR. This review takes place a few months before IDR, with the timing for each instrument dependent on the extent and level of required testing.

6.4.1.9 Instrument Delivery Review (IDR)

The instrument provider will conduct an Instrument Delivery Review (IDR) for both hardware and software. This review is held just prior to instrument delivery to the orbiter. Topics include results of verification of the instrument compliance with the FRD and the E-ICD, the results of environmental testing, and the completeness of the end item data package (EIDP). Closure and risk-rating of pre-delivery problem/failure reports will also be reviewed. This review will confirm that the instrument flight model meets all requirements and performance capabilities. Successful completion of this review is a prerequisite for authorisation to ship the instrument model to the ExoMars Trace Gas Orbiter integration site.

6.4.1.10 Instrument Integration Readiness Review (I2R2)

The Instrument Integration Readiness Review is convened by the orbiter team and evaluates the readiness of each instrument deliverable model for delivery to the system integration and testing flow. This review will confirm the instrument model meets all requirements for integration to the relevant system model. This review is held sufficiently in advance of the actual delivery date to allow for corrective actions to be taken in response to deficiencies apparent in the review. Key topics covered at this review include: Status of the item(s) to be delivered and associated documentation Personnel and equipment safety issues, Handling, Storage, Maintenance, Operating requirements and constraints, and Transportation plans.

6.4.1.11 Instrument Operations Readiness Review (I-ORR)

An instrument operations readiness review (I-ORR) will be conducted for each investigation team to assure interface compatibility between the MOS and the investigation team and to assess the operations readiness of the science team. This review is scheduled to occur about six months before launch and will focus on the operations environment, including hardware and facility readiness, a walk-through of the uplink planning and downlink analysis process and capability, and a review of the status of the data analysis software. This will be either an input to, or part of the Ground Segment Readiness Review.

6.4.2 Use of Teleconferencing and Video Conferencing

All PIs will be required to support a Project standard for video and teleconferencing . Wherever possible, the entire Project will utilize collaborative online meeting, screen sharing, teleconferencing and conference facilities to minimize travel expenses for routine meetings; e.g., IIMs, MMRs, etc.. Teleconference and video conference capability will also be required to support distributed mode Mission Operations and Operational Readiness Tests (ORTs).

6.5 Deliverables

In the following sections, Tables 6.5-1, 6.5-2, and 6.5-3 identify preliminary instrument delivery dates. As described in the following sections, the instrument providers must, while meeting schedule and cost, do the following:

1. Provide the hardware described in Section 6.5.2 that meets Project and investigation requirements. Table 6.5-1 lists the required hardware deliverables and the associated due dates.
2. Provide the software deliverables described in Section 6.5.3 Table 6.5-2 summarizes these deliverables and their due dates.
3. Provide or contribute to all required documents, as discussed in Section 6.5.4 and listed in Table 6.5-3.

6.5.1 Cost and Schedule Reports

A NASA-funded PI and investigation will be required to initiate cost accounts according to an agreed upon Work Breakdown Structure and Dictionary. An instrument schedule and baseline budget time-phased by month will be required at I-PDR.

A NASA-funded PI will provide input to the NASA Payload Manager to support the Project's earned value reporting, which will begin after the Instrument PDR. Any individual investigation whose contract value exceeds $20 M will be required to independently implement an acceptable earned value reporting system from the inception of the contract. If events call for a revision of the negotiated baseline cost plan, JPL will ask for it contractually.

Instruments from other participating countries will be required to provide financial reporting as required and/or deemed appropriate by their national funding agency.

6.5.2 Hardware

The instrument hardware deliverables consist of those models summarized in Table 6.5-1 ExoMars 2016 Orbiter Instrument Hardware Delivery Schedule below, and described in the Instrument Model Philosophy section of Appendix A3.

The instrument hardware model deliveries to the integration site in Europe must be accompanied by all ground support equipment (GSE) needed for stand-alone integration system test (including optical and/or thermal targets) and launch operations. An End Item Data Package must accompany the flight hardware. If only one GSE supports both the ETM and FM, it must meet the flight interface specifications.

An instrument Engineering Model or Qualification Model (fidelity requirements in Appendix A3) shall be part of the instrument proposal to support the instrument design qualification. The EM or QM may be required as a deliverable.

Table 6.5-1 ExoMars 2016 Orbiter Instrument Hardware Delivery Schedule

Deliverable Item	DESCRIPTION	DUE DATE
Instrument Structural and Thermal Model (STM) & GSE	Supports Orbiter mechanical testing and thermal environment testing	01 MAY 2012 (Project CDR – 9 mo)
Instrument Electrical Test Model (ETM) & GSE	Validates functional and electrical links with the Orbiter bus, and electrical conductance EMC	01 MAR 2013
Flight Model (FM), GSE, & Spares	Supports Flight Integration	03 MAR 2014

6.5.2.1 Instrument Structural and Thermal Model (STM)

The Instrument STM will be integrated on the Orbiter STM in order to perform the environmental qualification test campaign. STM requirements are described in Appendix A3.2.1. Specific details will be negotiated with the orbiter system and documented in the ICD.

6.5.2.2 Instrument Electrical Test Model (ETM)

The Instrument Electrical Test Model (ETM) is non-flight hardware that must be equivalent to the Flight Unit hardware to the extent described in Appendix A2.2.3. The purpose of this model is to validate the functional/electrical links with the Orbiter Bus, and to confirm electrical conductance EMC characteristics.

The instrument team may deliver an engineering model or a qualification model in place of the Electrical Test Model provided that the minimum requirements of the ETM are met.

6.5.2.3 Flight Model (FM)

The Flight Model hardware, including thermal blankets, shall meet all the requirements contained in the FRD and ICDs, as well as mission assurance requirements and will be integrated with the flight orbiter system. The accompanying GSE shall contain all hardware and software required to maintain the health and integrity of the flight unit and provide for stimulation and testing.

6.5.2.4 Flight Spares Strategy

Spare philosophy shall be proposed by the instrument Principal Investigator (PI) and defined in order not to exceed, in case of failure, a maximum down time of 5 weeks for Flight Hardware and 48 hours for GSE, during every nominal AIT sequence at unit, Subsystem or System level. During potential periods of repair of the FM-instrument a temporary delivery of the QM to the FM spacecraft, such that the AIV-programme of the spacecraft can continue, can be requested by the Instrument Provider on a case-by-case basis.

GSE spare parts shall be kept in stock only for those items, electronic boards and mechanical parts that cannot be directly provided through commercial vendors or that require very long procurement time. The instrument PI shall be responsible for the Spare Parts List definition and procurement upon Agency approval.

6.5.3 Software

Instrument Software Model:

The Instrument Software Model (ISM) is non-flight software to be installed in the EGSE. It must be representative of the Flight Unit SW to the extent described in Appendix A2.2.2. The purpose of this SW model is to validate the communication and functional links with the Orbiter Bus Avionics Test Bench.

Executable Instrument ETM- and FM-Software:

Instrument software running inside the ETM or the FM shall be provided with each hardware delivery. Their capabilities shall be as outlined in Appendix A2.2.3 and A 2.2.4, respectively.

Table 6.5-2 ExoMars Trace Gas Orbiter Instrument Software Delivery Schedule

Deliverable Item	DESCRIPTION	DUE DATE
Instrument Software Model	Supports Orbiter software development and testing	01 MAY 2012
ETM-Software	Functionally fully representative SW	01 MAR 2013
FM-Software	Final flight-SW	03 MAR 2014

6.5.4 Documentation

ESA and NASA use, at a minimum the following documents to control the development of the instrument, its interface with the spacecraft, and the certification of the flight worthiness of the instrument and its software. Instrument Providers on the Exomars 2016 mission shall deliver copies of the following controlling documentation at various stages in the instrument life cycle consistent with the standard practices of their institution, ESA, and NASA. The exact composition of this list may change after selection, but prior to confirmation.

Table 6.5-3 ExoMars 2016 Orbiter Instrument project Required Documentation (D–Draft, P–Preliminary, F–Final, X–full document package due)

TITLE OR DESCRIPTION OF DATA	Description	PROJECT PHASE					When Due
		A	B	C	D	E	
CONFIGURATION MANAGEMENT DOCUMENTS:							
Information and Configuration Management Plan	**How hardware, software, and documentation configuration control will be managed**	P	F				Gate Product (GP): Prel = Project SRR/MDR; Final at Proj PDR
Inputs To Experiment Interface Control Documents (E-ICD)	**Instrument inputs to Instrument/Spacecraft Interface Control requirements***	D	P/F				D: IFPDR-4mo; P: IFPDR-20day, F: IFDR+30day
Hardware End Item Data Packages, including HRCRs	**Complete set of all design, as-built, & test documentation of instrument hardware***				X		Retain documents at IP's facility; Deliver electronic copies to Project
Software End-Item Data Packages, including SRCRs	**Complete set of all design, as-built, & test documentation of instrument software***				X		Retain documents at IP's facility; Deliver electronic copies to Project
Support Equipment End Item Data Packages, including SECRs	**Complete set of design, as-built, & test documentation of instrument support equipment***				X		Retain documents at IP's facility; Deliver electronic copies to Project
Experiment Implementation Plan (EIP)	**Plan for managing and implementing the Instrument development**	D	F				Draft: Select.+4mo, Final: I-PDR - 2 mo
Technical Reviews	**Material Discussed at all instrument Reviews (Review Packages)**	X	X	X	X		Throughout life of project; as generated (5 days prior to reviews)

TITLE OR DESCRIPTION OF DATA	Description	PROJECT PHASE					When Due
		A	B	C	D	E	
Monthly Management Review (MMR)	**Monthly Management Review Packages**	X	X	X	X	X	Throughout life of project; as generated
SYSTEM ENGINEERING DOCUMENTS:							
Functional Requirements Document (FRD) and Functional Description Document (FDD)	**The Functions required of the instrument to meet its science performance requirements (NASA level 2).**	P	F				Prelim: I-PDR-40day; FINAL: I-PDR
Materials and Processes Control Plan and Data		P	F				Deliverable Item I-PDR
Contamination Control Plan and Analyses	**Plan to achieve contamination requirements and supporting analyses**		P	F			Prelim: I-PDR - 2 mo. FINAL: I-CDR - 3 mo.
Behavioral Description	**Description of how the instrument operates, including idiosyncracies**		P	F			Prelim: I-PDR-20 day; FINAL: I-CDR-20day
Hardware User's Manuals	**How to command and operate the instrument.**			P	F		Prelim: I-CDR-20day; FINAL: at IDR
FPGA Documentation	**FPGA code, supporting analyses (WCA, stress tests, etc)**	D	P	F			Draft: @ ICR, Prelim I-PDR-10day, FINAL: I-CDR w/ EIDP update
SOFTWARE DOCUMENTS							
Software Development Plan (SDP)	**Overal implementation for the instrument software**	P	F				Prelim: Select.+3 mo ADOS; Final: I-PDR-2 mo
Software Requirements Document (SRD)	**The functions required of the instrument software to meet its level 2 requirements**	D	P	F			Draft: I-PDR

TITLE OR DESCRIPTION OF DATA	Description	PROJECT PHASE					When Due
		A	B	C	D	E	
Software Integration and Test Plans (STP)	**Plan for integrating and testing the software with the instrument hardware**			P	F		Prelim: I-PDR - 1mo, FINAL: I-CDR - 1 mo
Software User's Manual	**How to command and operate the software**			P	F		Prelim: I-CDR - 1 mo, FINAL: ETRR-1mo Update at Delivery
TECHNICAL MODELS							
CAD Model	**3D Computer Aided Design files of instrument configuration**	D	P	F	U		Draft: Selection+3mo, Prelim: IFPDR-20day, FINAL: I-CDR update at IDR
Thermal Models	**Analytical model of thermal behavior of instrument and interaction with environment.** **An additional thermo-mechanical model will be required to support the orbiter-level break-up/burn-up analysis.**	D	P	F	U		Draft: Select+3 mo, Prelim: IFPDR-20day, FINAL: I-CDR-40day: update at PSR
Structural Model & Analyses	**Analytical model of static & dynamic structural behavior of instrument and interaction with environment**	D	P	F	U		Draft: Select+3 mo, Prelim: IFPDR-20day, FINAL: I-CDR-40day: update at PSR
RESOURCES MANAGEMENT							
Work Breakdown Structure and WBS Dictionary		P	F				1 Mo. after selection; Final at I-PDR
Project Schedules	**Detailed schedule of instrument project tasks and their interrelationships**						Provide in native and PDF format - At all major and minor reviews
Cost Performance &/or Earned Value Reporting	**Accounting of Costs and Obligations planned vs. Actual**	x	x	x	x	x	Monthly throughout until delivery + 30 days

TITLE OR DESCRIPTION OF DATA	Description	PROJECT PHASE					When Due
		A	B	C	D	E	
Mass, Power, and Data Reports	**component by component mass, subsystem power, and instrument data rate**	x	x	x	x	x	Monthly throughout until delivery + 30 days
INTEGRATION, TEST, AND VERIFICATION DOCUMENTS							
Verification & Validation, Plan	**Plan for verifying and validating the instrument functional and interface requirements**	D	P	F			Preliminary: I-PDR - 1 mo, FINAL: I-CDR - 1 mo
System (orbiter) level Instrument Test Procedures	**Procedures for testing instrument after integration with spacecraft and/or testbed**			P	F		Preliminary: I-CDR, Final: IDR
Instrument Calibration Plan	**Plan for calibrating instrument functions to allow correct interpretation of data**		P	F	U		Preliminary: I-PDR - 1 mo, FINAL: I-CDR - 1 mo
Test, Verification, and Calibration Reports	**Reports documenting results of all V&V and Calibration measurements**		X	X	F	-	As generated; Final: IDR
Telemetry Calibration Data Handbook	**Calibration files for all telemetry items for converting Engineering to Physical Unnits**			P	F		Preliminary: ETRR-20day, Final: IDR-20day
PRODUCT/MISSION ASSURANCE DOCUMENTATION							
Environmental Verification Records	**Env. Test Procedures, Env. Test Authorization, Qual Test reports**		X	X	F		As generated, Final at IDR
Safety and Product/Mission Assurance Plan (PA / MA Plan)	Overall Plan for meeting Safety and Mission Assurance Requirements		P	F			Preliminary: 3 mo. ADOS, FINAL; PDR - 2 mo
Hardware Quality Assurance Data and Documentation	**Numerous QA, Test and Materials Certifications, etc.**	X	X	X	X		Throughout design, development, to delivery; FINAL at PSR

TITLE OR DESCRIPTION OF DATA	Description	PROJECT PHASE					When Due
		A	B	C	D	E	
Electronic, Electrical and Electromechanical Parts Data	Numerous Electronic Parts Analyses, TestReports & Certifications, etc.	X	X	X	X		Throughout design, development, to delivery; FINAL at PSR
Reliability Data And Analyses	Parts Stress, Worst Case Analyses, thermal & structural stress analyses, etc.	X	X	X	X		Throughout design, development, to delivery; FINAL at PSR
Problem/Failure Reports (Non-Conformance Reports)		X	X	X	X		Throughout design, development, to delivery; FINAL at PSR
Risk Assessment Inputs	Inputs to Project Risk Assessment function	X	X	X	X		Throughout design, development, to delivery; FINAL at PSR
Planetary Protection (PP) Plan and Planetary Protection Implementation Plan (PPIP)	PP Plan to be integrated within the E-ICD and follow E-ICD schedule above. PPIP to be self standing document		D	F	U		PPIP: Draft: I-PDR-20day, FINAL: I-CDR-40day: update at IDR
MISSION OPERATIONS DOCUMENTATION							
Command and Telemetry Definitions and Flight Rules	Definitions of Instrument Commands & Telemetry; Flight Rules for operating instrument		P	F	U		Preliminary: I-PDR - 1 mo, Final, I-CDR - 1 mo, Update, IDR - 1mo.
Experiment Operations Plan (EOP)			P	F			Preliminary: I-PDR - 1 mo, Final, I-CDR - 3 mo
Data Archive Plan	Plan for data product generation and archiving		P	F			Preliminary: I-PDR - 1 mo, Final, I-CDR - 3 mo

6.5.4.1 Experiment Interface Control Document (E-ICD) and Experiment Implementation Plan (EIP)

An Experiment Interface Control Document (E-ICD) is required by NASA and ESA from all instrument providers prior to the Instrument PDR. The E-ICD contains the technical interface information, and the project interface information for the instrument development which needs to be shared with ESA. A short outline of the E-ICD follows (a full template with content descriptions will be provided after selection):

1 Document Scope

2 Introduction
- 2.1 Key Personnel

3 Reference Documents

4 Instrument Management
- 4.1 Organisation and Responsibilities
- 4.2 Communication
- 4.3 Reviews
- 4.4 Configuration Management
- 4.5 Deliverable Items
- 4.6 Receivable Items
- 4.7 Instrument Schedule

5 Experiment Description

6 Engineering Requirements
- 6.1 General Design
- 6.2 Mechanical Design and Interfaces
- 6.3 Thermal Design and Interfaces
- 6.4 Electrical Design and Interfaces
- 6.5 Data Handling Design and Interfaces
- 6.6 Software
- 6.7 Environmental Design and Compatibility
- 6.8 Functional and Operational Interfaces
- 6.9 GSE Design and Interfaces

7 Planetary Protection and Contamination

8 Instrument Assembly, Verification and Test

9 Ground Operations

10 Flight Operations

11 Product Assurance

12 Glossary

Experiment interface control documents (E-ICDs) are prepared based on, and in response to, the Experiment Interface Requirements Document (E-IRD) which will be distributed following

instrument selection. The E-ICDs are multi-party agreements among the PI, funding agency, NASA, ESA and the spacecraft manufacturer. The E-ICDs are prepared and maintained by JPL for U.S.-led instruments, and by the ExoMars Trace Gas Orbiter manufacturer for European-led instruments based on inputs provided by any of the participating parties. The E-ICDs are negotiated directly with, and are subject to approval by the ExoMars Trace Gas Orbiter Project.

E-ICDs identify all instrument interfaces, including the instrument envelope, mounting, mass, center of mass, electrical and mechanical connections, end circuits, consumption and dissipation power, pyrotechnic devices, features requiring access or clearance, purge requirements, environmental requirements, software requirements, information flow, view angles and clearances, thermal interfaces, and GSE interfaces/requirements.

NASA requires further information, to be contained in an abbreviated experiment implementation plan (EIP), which expands on the E-ICD. The EIP is required by NASA from all NASA-funded instrument providers and is updated as required through the life of the Project. An outline of the EIP follows:

1. Detailed Instrument Design, Fabrication, Test, Calibration, Verification and Validation (V&V), and Operations Development Plans
   - Schedule and Schedule Management
   - Cost Control / Earned Value Reporting (if contract is above threshold value)
   - Subcontracts
   - Hardware and Software Development
   - Operations and Data Analysis Development
   - Facility and Interface Development
   - Hardware & Software Requirements Verification & Compliance Matrix
   - Environmental Testing
   - Product/Mission Assurance
   - Configuration Management and Control
   - Calibration
   - Test & Verification Plan (to be included in EIP update delivered at I-CDR)
   - Descope strategies
2. Requirements for JPL Support and JPL-Supplied Hardware
3. Requirements for Science Team Support and Data Analysis
4. Phase C/D Cost Plan

Investigation proposals should address preliminary planning for each EIP section identified above.

6.5.4.2 Functional Requirements Document (FRD)

The PI is responsible for writing the instrument functional requirements document (FRD), subject to Project approval. This document shall derive the instrument science performance requirements from the science objectives.

6.5.4.3 Functional Design Description document (FDD)

The PI is responsible for writing the Functional Design Description document (FDD), subject to Project approval. This document merges instrument requirements, functional description, operational scenarios, modes and states, off-nominal behavior, commands, telemetry, flight rules, and other instrument attributes important to understand its functionality and operation.

6.5.4.4 Experiment Operations Plan (EOP)

Based on MOS Requirements, the PI will be required to generate an Experiment Operations Plan that includes the following:

1. Overall approach, organization and roles for the operations phase
2. Operations team process and procedure definitions
3. Total investigation costs for MOS development, mission operations, and data processing support in Phase E (not applicable for non US-funded portion of contributed PI Investigations)
4. A budget for the PI and for each Co-Investigator and for specialized data processing support
5. Post-launch plans for ground data system development and for operations personnel training and test to achieve orbital operations readiness
6. Ground system development, mission operations and data analysis schedules for Phase E
7. An investigation data management plan for science data processing, distribution, analysis, and archiving
8. Updates to reflect final MOS requirements: due prior to launch

6.5.4.5 End Item Data Packages (EIDP)

The EIDP includes, but is not limited to,

(1) Build/test documentation such as As-Built" hardware documentation, complete manufacturing and quality history of the deliverables, shortage and test lists, Operating time data, copy of all Anomaly (Problem/Failure) reports and QA discrepancy reports as well as MRBs, summary of applicable deviations and waivers, list of action items generated, final part and materials as built lists and high-resolution color photographs of the assembled instrument (with scale inserted)

(2) Engineering/design documentation such as final drawings and schematics, CAD "solid model" including dimensions, documents, mass properties, qualification data, thermal and structural analysis results, footprint drawing, as-built power measurements,

(3) Other documentation such as completed instrument requirements verification and compliance matrix and Handling and operating constraints. In addition, the following are included as required unless provided as a separate deliverable: reliability analyses including failure modes, effects and criticality analysis (FMECA), parts stress analysis (PSA), single event effects (SEE), and planetary protection measures. An EIDP must be provided for all flight model hardware.

6.5.4.6 Product or Mission Assurance Plan

The Payload Product Assurance Requirements (PAR) document, which may also be referred to as a Payload Mission Assurance Requirements (MAR) or Payload Safety and Mission Assurance Requirements (SMAR), will serve as the master Safety and Product/Mission Assurance specification and control document for all instruments. Each Instrument provider shall submit an Instrument PA or MA/SMA plan (or series of plans) to the Funding Agency project office for approval in response to the Payload Product Assurance Requirements (as defined in the Subcontract Data Requirements List or SDRL). The plan describes how the applicable PA/MA requirements and implementation guidelines are to be implemented and includes the following:

a. Objectives and overall approach for the program, especially in regards to enhancing the likelihood of mission success through the implementation of established and proven PA/SMA processes, fulfilling the imposed requirements and assuring instrument reliability, quality and performance

b. Details on the processes and procedures used for each of the applicable PA/SMA disciplines or areas, such as product/mission assurance management, systems safety, reliability assurance, anomaly reporting, environmental assurance, orbital debris, EEE parts reliability, hardware and software assurance, risk management, reviews, contamination control, materials and processes and configuration management.

c. Defined roles and responsibilities of PA/SMA team members, including any additional organizations involved in the programme and description of how they report and inter-relate. This also includes a designated single point of contact responsible for planning and implementation of instrument assurance programme throughout the development

d. Description of the process for the risk evaluation and disposition of the exceptions to the requirements, also known as the waiver process

e. Approaches and methods for sub-contractor, supplier and contributor surveillance and assurance programme coordination

f. A description of the documents/data (with schedule) that the Instrument Provider submits to the Funding Agency for approval, including addressing the Subcontract Data Requirements List and Data Requirements Descriptions (DRD) or similar contract documents

g. Plan for reporting on a regular basis the assurance programme status as specified in the subcontract, which may be in the form of standard briefing charts, risk lists/matrices, waivers, or special topic reviews

h. Provisions for the Funding Agency to have access to documentation and information of analyses, test reports, failure reports, and other documents as requested by the Project Management in accordance with the subcontract.

6.6 Receivables

The Experiment Interface Requirements Document (E-IRD) will be delivered to each instrument provider after instrument selection, and as the document is updated thereafter. Further document deliveries (e.g. technical descriptions of the ExoMars Trace Gas Orbiter) to the instrument providers will be specified after selection.

6.7 Product/Mission Assurance Program

Instrument providers are required to plan and implement comprehensive assurance programs, referred to as Product Assurance (PA), Mission Assurance (MA) or Safety and Mission Assurance (SMA) programs or similar titles as specified by their Funding Agency. The programme includes the technical disciplines of Systems Safety, Reliability Assurance, Hardware Quality Assurance, Software Quality Assurance, EEE Parts Engineering and formal Anomaly or Problem/Failure Reporting, as well as overall Assurance Management and may also include Environmental Assurance, Configuration Management, Risk Management, Materials and Processes and Contamination Control, as identified by the Funding Agency.

PA/MA/SMA programs are conducted throughout the instrument lifecycle and are established to comply with project/programme specific requirements specified by the Funding Agency for each instrument as well as related standards or policy documents. These requirements are expected to include and be influenced by a risk categorization by the Funding Agency, assigned after selection, such as those defined in NASA Procedural Requirements (NPR) 8705.4 or a European equivalent.

Typical payload risk categorizations of “Class C” (per NPR 8705.4) are expected for most instruments, with the possibility that instruments responsible for key mission measurements may receive a “Class B” designation. Differences between these categorizations are highlighted in the following paragraph.

The assurance requirements apply to all flight and ground support hardware and software developed and operated for the project. Instrument providers are encouraged to implement programs using existing processes that are equivalent to or meet the intent of the assurance programme requirements rather than modifying or developing new processes (subject to approval of the Funding Agency)

The following requirements are considered the key resource driving requirements needed to understand the scope of the PA programme needed to prepare a responsive proposal. The exact details of the PA/MA requirements will be provided formally soon after selection so that instrument design and planning can proceed accordingly.

For a non NASA-funded proposal the PA/SMA requirements will be a tailoring of those ESA ExoMars Product Assurance Requirements (EXM-MS-RS-ESA-00002).

Key requirements of PA program:

- Lifetime requirements as detailed in Section 5.9.

- For Class C Instruments, Critical Single Point Failures (SPFs) (for Level 1 requirements) are permitted, while for Class B instruments, selective redundancy, as a minimum is highly encouraged
- Standard suite of reliability analysis, including Electrical Parts Stress Analysis (EPSA), Single Event Effects Analysis (SEEA), Interface Failure Modes and Effects Analysis (I/F FEMA) or Interface Failure Modes, Effects and Criticality Analysis (I/F FMECA) and Fault Tree Analysis (FTA) for Mechanisms, except that Worst Case Analysis (WCA) would be required for Class B instrument only, plus independent formal review.
- Minimum power-on operating times of 300 hours at Instrument level prior to spacecraft integration
- Certification or compliance to an accepted Quality Management System (i.e. ISO)9001:2000, AS9100, AS9120, AS9003 or ISO 17025)
- Use of workmanship standards as approved by Funding Agency, or approved contractor equivalents
- Electronic, Electrical and Electro-mechanical (EEE) Parts quality - NASA Standard Parts Level (NSPL) Level 2 for Class B Instruments and Level 3 for Class C Instruments, or European equivalent
- Parts and Materials operate within specification following exposure to 2 times the radiation dosage levels
- Prohibitions on materials that exceed outgassing and other contamination levels or Electrostatic Discharge (ESD) levels, that contain lead or similar materials causing whisker growth or nutrients for fungi, and/or that would create toxicity or other hazards problems
- Use of a rigorous closed-loop Failure Reporting and Corrective Action system and a formal Material Review Board (MRB) or similar system for quality non-conformances
- Flight hardware protection measures implemented and hazard assessments completed for all hardware/equipment delivered
- Software safety, where applicable, including a listing of Software Safety Critical functions and software hazards analyses
- Formal Software Assurance program, where applicable
- Hardware designed (and tested) to withstand the expected environments with standard Funding Agency margins for high reliability hardware
- Instrument environmental test programme consisting of the following suite of tests:
  - Random vibration
  - Sine vibration (TBC – assume must be done for cost purposes)
  - Pyroshock (pyro firings) (TBC – assume must be done for cost purposes)
  - Thermal vacuum / thermal balance
  - EMC/EMI: self compatibility plus radiated emissions and radiated susceptibility.
  - Magnetics (as needed)

- Submittal and Funding Agency Project Office approval of plans, analyses, test reports, etc as delineated in contract SOW and/or SDRL/DRDs
- Testing for verification of safety compliance and interface compatibility.
- Full formal review program, including hardware and software Delivery Reviews or equivalent and formal inheritance reviews
- Formal Configuration Management program

APPENDICES

The following appendices are provided as a reference and should be considered a preview of the Interface requirements which will be formally negotiated and released after selection.

A1 INSTRUMENT INTERFACE REQUIREMENTS

A1.1 General Design Requirements

A1.1.1 Identification and Labelling

The rules for product item identification are uniform within the program.

A1.1.1.1 Configuration Control Definitions

Product Tree

Starting from both the project functional structure and the ESA Requirements, the Product Tree (PT) is established to define the ExoMars product architecture.

The PT defines the product breakdown of the ExoMars down to the items of the lowest sub-contracting level, as necessary.

Each item of the Product Tree will be identified by a unique identification code.

Such a code will be assigned taking into account the hierarchical position of the item in the Product Tree.

The identification will remain unchanged during the product lifetime, unless a modification causes discontinuation of interchangeability.

The product tree is used as source for the selection of configuration items and is the basis for the preparation of Configuration Item trees and CIDLs.

It is also the basis of organisation of the programme Work Breakdown Structure (WBS), by applying to the Product Item Code a prefix referring to the applicable programme phase and a suffix referring to the support functional file.

Through the identification of Thales Alenia Space Italia responsibility, the PT is as well the reference for preparation of the Industrial Organization Structure (IOS).

The PT is as well the reference for preparation of the Specification Tree.

A1.1.1.1.1 Product Item Code

For Exomars project the Product Item Code is composed by 10 alphanumerical characters which allow, if any, the implementation of intermediate layers of Product Items. The structure of the Product Item Code is established as follows:

- **E YY XXXXXX**
  - E ExoMars

- YY 00 Overall program
  10 Spacecraft Composite
  11 Orbiter Module (OM)
  12 EDL Demo Module (EDM)
- XXXXXX Characters available for further flight breakdown of the relevant main product
  nodes (Subsystems & Equipments)

The Product Item codes for the Orbiter Instruments are assigned by the Prime Contractor.

A1.1.1.1.2 Configuration Item Code

A configuration Item is defined as an "aggregation of hardware, software, processed materials, services or any of its discrete portions, which is designated for configuration management and treated as a single entity in the configuration management process.

A CI is a specific item that is referenced, as end use function Item in the Statement of Work (SOW) and is defined for manufacturing, assembly, acceptance and delivery by the relevant applicable design specification.

A Design Specification may define one PI and one or more CI's related to the PI.

The CI number, Part Number, and relevant serial numbers and revision index will define the state of the art of the design and its built standard.

Each Product item and Configuration item will be identified in unique and permanent way by an alphanumeric code. Ten alphanumeric digits constitute the Product item code. The Configuration item code, is composed by, the Product item code plus a suffix identifying the model.

An example of the CI code is the following:

- **E YY XXXXXX Z**
  - E YY XXXXXX Product Item Code
  - Z Model Code (see below)

The model codes to be used for ExoMars project in general are the following:

A = Avionics Model (AVM)
B = Breadboard
D = Development Model (DM)
E = Engineering Model (EM)
F = Flight Model (FM)
G = Ground Support Equipment (GSE)
M = Engineering Qualification Model (EQM)
P = Protoflight Model (PFM)
Q = Qualification Model (QM)
S = Flight Spare
T = Structural Thermal Model (STM)
U = Functional Model (FUMO)

W = Instrument Software Model (ISM)

A1.1.1.1.3 Part Number

Each part will be identified by its part number, which will be assigned by the company responsible for its design.

Thales Alenia Space Italia will apply their internal Drawing/Part Numbering rules /procedures.

Subcontractor Companies procedures will define the drawing/Part numbering techniques to be applied including the capability for recording, maintaining and issuing release data.

Part numbering technique (or coding system) will be described inside the Configuration and Information Documentation Management Plan of each Instrument.

A1.1.1.1.4 Serial Number

All parts will be serialised in accordance with the Product Assurance Requirements.

The serial number is a number assigned to the HW to specify the proper identification in the frame of total quantity applicable to each P/N; this is also valid if total quantity is equal to 1.

Serial numbers will be allocated by each Subcontractor to provide unique identification of each part specimen produced for the project.

For traceability purposes Serial Numbers will also be allocated to items below equipment level.

A1.1.1.2 Hardware Identification

Each separable item will be subject to configuration control and will be marked or stamped for permanent identification and in accordance with Product Assurance requirements.

Each instrument unit is required to bear a unit identification label containing at least the following information:

- Programme name
- Configuration Item Code (see 6.1.1.1.3)
- Part number of the item (see 6.1.1.1.4)
- Serial Number/batch/lot number (see 6.1.1.1.5)
- S/W Identification code and version (if embedded)
- Nomenclature of the item
- Model
- Contract number
- Quality Control Stamp (if applicable, otherwise Certificate of conformance reference)
- Manufacturer name & plant

Where the physical size of the item precludes identification of the item itself, the method to be applied and/or the data to be included, will be agreed on case by case basis between ESA/NASA and the Instrument providers..

The identification label shall be attached to each instrument unit at a location that guarantees maximum visibility.

The location and content of the instrument unit's identification label shall be shown on the external configuration drawing(s) of the respective unit.

The identification label shall be clearly legible.

A1.1.1.3 Connector Identification

Each equipment box is required to bear visible connector identification labels closely adjacent to the appropriate connector. Spacecraft philosophy is to locate a "J" character to all units fixed (hard mounted) connectors and a "P" character to all harness mounted connectors, followed by a 2 digit number. Each unit is treated individually in this respect, starting at "J01"for unit fixed connectors.

For full connector identification these three alphanumeric characters are preceded by the identification code of the instrument unit, which is composed by:

- **E YY XXXXXX NNN**
  - E YY XXXXXX Product Item Code
  - NNN unit serial number

Since the Product Item Code and the unit serial number already appear on the unit identification label, unit fixed connectors are not required to bear the full connector identification code; "J" + progressive number would suffice. The complete identification code is mandatory on harness side connectors.

The location and content of the above described identification labels shall be included in the external configuration drawing.

A1.1.2 Standard Metric System

Drawings, specifications and engineering data shall use the International System (SI) and Metric Standard,

The key and derived units shall be specified in:

- Dimensions in Millimetres [mm]
- Angles in degrees
- Temperatures in degrees Celsius
- Power / Heat in Watts [W]
- Energy in Joules [J], or Watt-hours [Whr]
- Mass in Kilograms [kg]
- Magnetic Field in Tesla [T]
- Time in seconds [s], hours [h] or sols [sol]
- Electric Current in Ampere [A]

- Amount of substances in moles [mol]
- Luminous Intensity in candela
- Force in Newtons [N]
- Pressure in Pascal [Pa]
- Torque in Newton-metres [Nm]

A1.1.3 Lifetime Requirements

Design lifetime requirements shall be applied with respect to ground and mission environmental influences and use conditions (they are typically specified in the documentation for mechanical, thermal and electrical design).

Where the design margin is required for demonstration of resistance to failure modes, a factor of two times the nominal life time shall be included as a minimum.

For items which degrade with usage the life time shall be two times the nominal operational life time, unless specific requirements apply.

In the frame of the instrument design the following life time requirements shall be made applicable to all parties involved in the instruments:

- The instrument shall be compatible with 24 months of ground testing and AIV activity at system level before the nominal launch date (Ground Environmental Influence).
- The overall instrument life time shall be compatible with the increased storage time resulting from a launch delay: 28 months to meet the following launch opportunity in 2018 (Ground Environmental Influence).
- The instrument shall be compatible with cruise and aerobraking for Mars orbit acquisition, lasting 19 months (Space Environment) assuming worst case aerobraking duration. During this period the instrument is nominally off but shall be periodically switched on for check-out purposes.
- The nominal instrument operational life time shall be at least 2 years nominal mission in Mars orbit (Space Environment and Use Conditions).

Summarizing, minimum lifetime requirements for each instrument are:

- +24 months Testing and AIV activities Ground Environment
- +28 months Launch delay (storage) Ground Environment
- +19 months Cruise + Mars Orbit Space Environment (instrument nominally off)
- +24 months Nominal Mission Space Environment (instrument nominally on)

Note: Orbiter consumables are sized for a mission up to end of 2022

A1.1.4 Maintainability

All equipments shall be designed to require a minimum of special tools and test equipment to maintain calibration, perform adjustments and accomplish fault identification. No periodic maintenance for the entire duration of the ground activity should be required.

The instruments shall be designed for installation and removal from the spacecraft without disassembly of the equipment.

Mounting and removal activities shall be performed with normal standard tools. In case Special GSE is needed, refer to Appendix A1.9.3.

Items to be removed before flight (red tag) shall be clearly visible and easily accessible after integration with the spacecraft.

Items requiring integration for safety, logistical or life reasons, close to launch, shall be accessible without removing any equipment from the spacecraft.

Items which require adjustment, servicing or maintenance before launch shall be accessible without removing any equipment from the spacecraft.

A1.1.5 Workmanship

All design and manufacturing shall comply with the space industry standard and shall comply with the Product Assurance requirements listed in Appendix A4 of this E-PIP document.

A1.1.6 Fault Propagation

The Instrument shall be designed to avoid any failure propagation towards other equipment, through electrical harness or by thermal or mechanical effects.

Neither hardware nor software failures shall propagate to cause additional failures or the hazardous operation of interfacing hardware.

Failure of any of the instrument’s mechanisms shall not cause a reduction or loss of sight of other instruments or platform sensors/antennae.

A1.1.7 Coordinate Systems

All reference frames shall be right-handed orthogonal triads.

A1.1.7.1 S/C Reference Coordinate Systems

The Spacecraft Composite Coordinate Frame (SC) shall be a right-handed, orthogonal coordinate system used for geometrical configuration, design drawings and dimensions, and defined as follows (see Figure A1 1):

- O-SC origin located on the Spacecraft Composite/Launcher separation plane at the centre of the Spacecraft interface ring
- X-SC axis orthogonal to the Spacecraft Composite/Launcher separation plane, pointing positively from the separation plane towards the Descent Module (central tube axis).
- Y-SC axis orthogonal to the X-SC axis and nominally orthogonal to the Solar Array plane. This direction will be further marked with a keyway on the SC to Launcher interface flange (Note: -Y points towards Nadir from Mars orbit).
- Z-SC axis completing the right handed coordinate system such that: $Z = X \times Y$ (vectorial product). Correspond to solar array axis in deployed configuration.

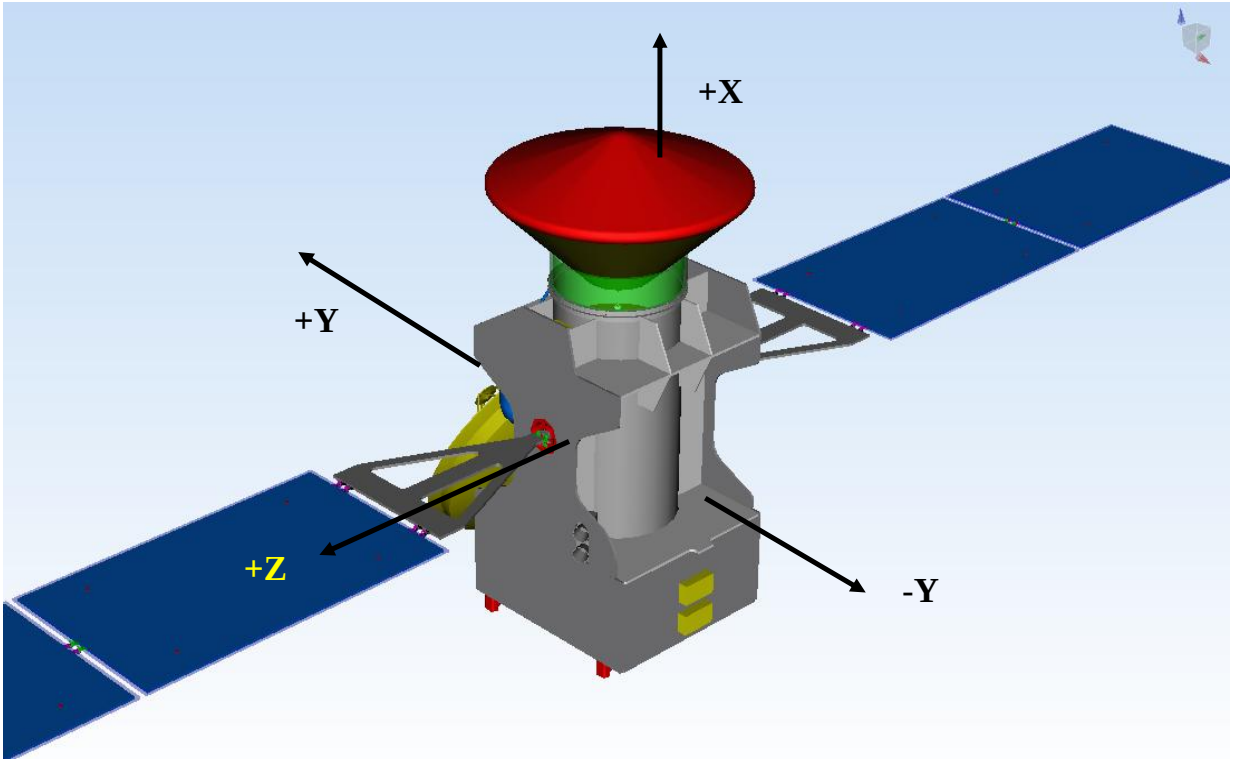

Figure A1 1 Spacecraft Composite Coordinate Frame

A1.1.7.2 Unit Reference Coordinate Systems

In order to provide a local reference system for describing the unit physical properties each instrument unit shall have a right-handed cartesian coordinate system

The Unit Coordinate Frame (UN) is a right-handed, orthogonal coordinate system, fixed to the unit geometry, and defined as follows (see Figure A1 2 Unit Reference Coordinate Frame):

- one of the attachment holes of the unit shall be chosen as the Reference Hole which shall be identified by an engraved letter "R" on the unit
- the O-UN origin shall be located at the centre of the Reference Hole at the level of the mounting interface plane
- the X-UN axis shall be perpendicular to the mounting interface plane, pointing positively towards the unit
- the Y-UN- and Z-UN axes shall be oriented such that the unit will be included inside the +Y/+Z quadrant of the mounting interface plane. Moreover, if the unit has a rectangular shape, the +Y and +Z axes shall be parallel to the sides of the unit Inertial Reference Frame.

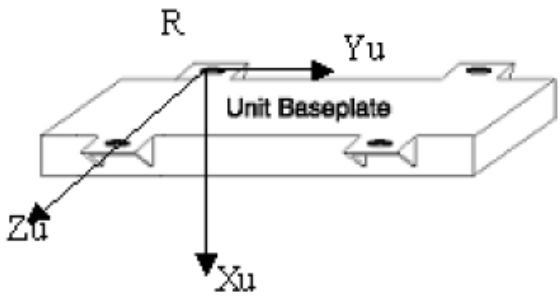

Figure A1 2 Unit Reference Coordinate Frame

A1.1.7.3 Unit Optical Alignment Frame

The Unit Optical Alignment Frame (UNAF) is a right-handed, orthogonal coordinate system, used for alignment purpose (see Figure A1 3 Unit Optical Alignment Frame):

- the O_{UNAF} origin shall be located at the centre of the unit alignment cube
- the X_{UNAF} , Y_{UNAF} and Z_{UNAF} axis shall be the normal to the mirror faces of the optical alignment cube oriented such to be parallel with the UN-Ref

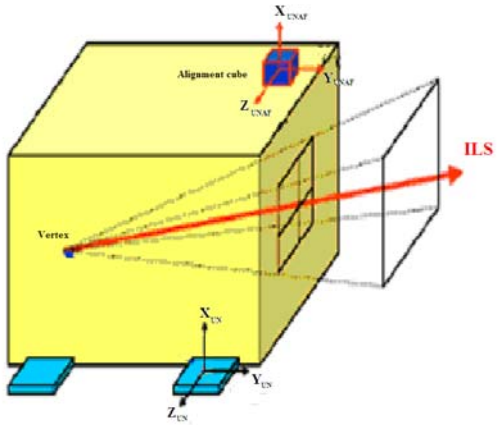

Figure A1 3 Unit Optical Alignment Frame

A1.1.7.4 Instrument Line of Sight (ILS)

The Instrument Line of Sight (ILS) is defined as being the centreline of the instrument Field of View and described in terms of Azimuth (Azi (ILS)) and Elevation (Ele (ILS)) such that (see Figure A1 4):

- Azimuth is the angle between the ILS projection in the Xu-Yu plane and the +Xu-axis. This angle is positive from +Xu to +Yu within the range 0 up to 360 degrees.
- Elevation is the angle between the ILS direction and its projection on the +Zu direction. This angle is counted positive from the +Zu axis towards the Xu-Yu plane being positive in direction +X and negative in direction -X. The angle varies in the range ± 90 deg.

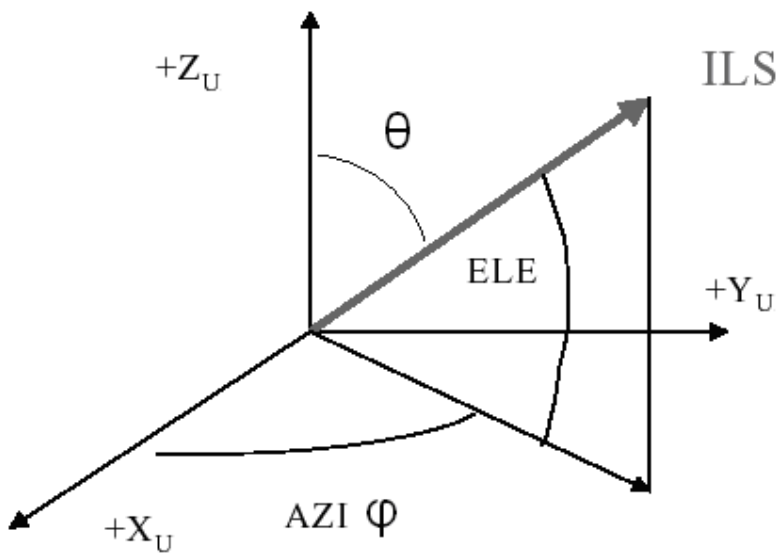

Figure A1 4 Instrument Line of Sight (ILS)

A1.1.8 Instrument Alignment

A1.1.8.1 Pointing Definitions

Positioning of specific items shall be performed, or just the actual position only measured, with respect to defined references, as required by mission/design purposes. These references may be located on the structure or on other functional units.

In general, when the necessary positioning is not accurate, the specified mechanical manufacturing and interface tolerances and local physical reference shall guarantee, as far as possible, the necessary position precision. To set the item position using local physical reference, it can be used any appropriate plane, line, point of the item structure.

Optical position measurement

For more accurate positioning or just position measuring only, adequate measurement method will be selected in accordance with the Prime. Depending on the measurement method implemented, the item could be equipped with specific visual targets (e.g. using high precision "laser tracker" measurement machine). The targets and the measurement method/machine shall be compatible with the specified positioning measuring requirements.

The target could be a plate, point or sphere fixed (either bonded with a suitable adhesive or securely screwed) to a dimensionally stable part of the unit structure or module structure, in a visible and repeatable position.

Optical accuracy

Unless otherwise specified, the positioning shall be measured or calibrated about all relevant axes to an accuracy of better than 0.1 mm along all axes.,.

Fine positioning

In case fine positioning is required, special adjusting tool/device (e.g. shimming) and dedicated procedure will be utilized. In alternative, to assure precise position of specific items, special positioning tools (calibrated pins and templates) can be used, placing the item directly in the correct position with the desired tolerances (e.g. for mechanical parts that have to mate/demate each other during spacecraft integration or mission operation).

In this case the item shall be provided with interface configuration and details suitable to mate with the positioning tools planned to be used.

A1.1.8.2 Alignment Definition

Coordinate Frames

All needed coordinate frames are defined in section A1.1.7.

Physical alignment

In general the necessary alignment shall be guaranteed, as far as possible, by local physical reference and mechanical manufacturing and interface tolerances. To set the item alignment using local physical reference, it can be used any appropriate plane, line, point of the item structure.

Optical alignment measurement

For more accurate aligning or just alignment measuring only, the alignment measuring technique based on reference optical mirror cubes and theodolite shall be adopted. The mirror cube tolerances and theodolite precision shall be compatible with the specified alignment measuring requirements.

A1.1.8.3 Alignment philosophy

This section shall provide an overview about the alignment philosophy applied for the Orbiter Instruments:

The scientifically relevant error to be quantified is the error between the commanded (intended) pointing attitude (PRB) and the actual pointing of the Instrument Line of Sight (ILS). At the first glance the error budget can be divided in two major continuants:

- the misalignment contribution between the ILS and the AOCS Reference Frame which is the +XOPT
- the system related pointing error (consequently indexed with system)

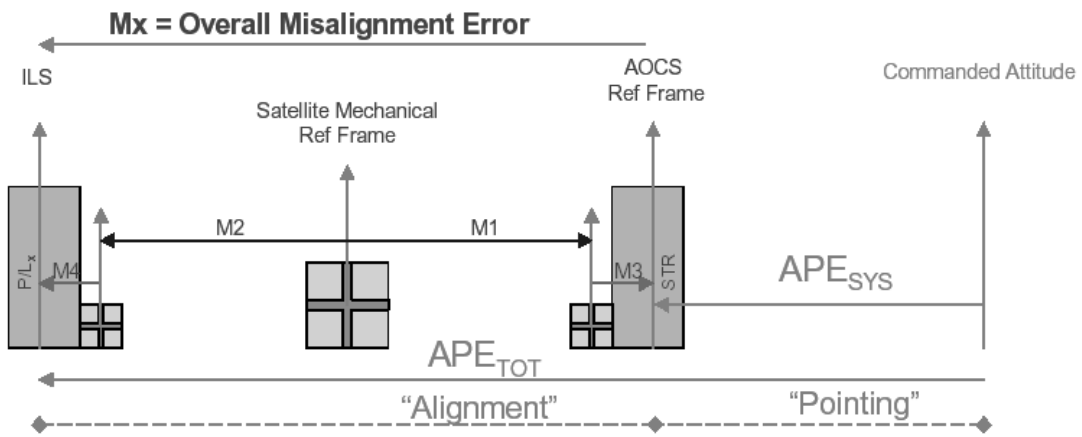

Figure A1 5 Overview of Misalignment Terminology

The first contribution is measured at system level and described (in principal) by the following rotational matrices:

- M1…Rotation Matrix to pass from S/C MRC to STR Cube as derived from the alignment data (system AIV).
- M2…Rotation Matrix to pass from S/C MRC to instrument Unit Cube as derived from the alignment data (system AIV).
- M3…Rotation Matrix to pass from STR Cube to STR Functional Frame as provided by the STR supplier.
- M4…Rotation Matrix to pass from Unit Cube to Unit Functional Frame as provided by the Orbiter Instruments.

The S/C MRF is the Mechanical Reference Frame is defined by the Satellite Master Reference Cube (MRC) mounted in a specific position on the satellite and representing the three satellite axes.

The total misalignment will result in:

$Mx = M2 \times M4 \times M1^{-1} \times M3^{-1}$

MRC/UC x UC/UF = MRC/UF

inverse(MRC/STR C x STRC/STR F)= inverse(MRC/STR F) = STR F/MRC

Mx = M2 x M4 x inverse (M1 x M3)

On the basis of the calculation above described, the real rotation matrix is compared with the theoretical one. The misalignment between the two matrices is defined by the following:

$$\begin{pmatrix} 1 & \psi & -\theta \\ -\psi & 1 & \varphi \\ \theta & -\varphi & 1 \end{pmatrix}$$

where φ, θ, ψ are the (small) rotation angles about the axes x, y, z of one of theoretical one.

A1.1.8.4 Misalignment Contributions

The structural stability performance (structure deformation) impacts on the alignment error between actual and measured pointing.

The Table below reports the expected contributors to the alignment error, occurring in different phases.

Misalignment phases	*Misalignment Contributors*
On-ground alignment measurement errors	• Accuracy/resolution of the alignment measurement tools. • Precision by which the optical references (optical cubes) have been manufactured.
On-ground alignment variations	• Spacecraft integration and handling. • Ground operations (e.g. mounting/dismounting of side panels) and tests. • Transportation to test facilities, to launch site etc..
Ground-to-cruise alignment variations	• Launch vibrations. • 1g/0g gravity release.
Cruise alignment variations	• Moisture release. • Thermo-elastic deformation of the structure. • Material ageing.

As far as the Orbiter Instruments is concerned the error source under his control is the misalignment and in flight stability of the ILS with respect to the instrument alignment cube. The remaining error contributors are under system control and will be managed by the Prime.

A1.1.8.5 FOV and Instrument Line of Sight (ILS)

The Orbiter Instruments shall, where relevant, specify with respect to the unit coordinate system URF and in accordance to the pointing definitions:

- the Instrument line of Sight (ILS)
- the FOV

The information shall be contained in the Mechanical ICD.

The Orbiter Instruments shall, where relevant, provide the transformation matrix defining the ILS with respect to the instrument alignment references (alignment cube) for further inclusion in the alignment and pointing budgets at system level.

The Orbiter Instruments shall further define the acceptable accuracy, knowledge and stability in terms of azimuth and elevation of the ILS with respect to the Spacecraft Mechanical Build Axes

The Orbiter Instruments shall define the misalignment and in flight stability of the ILS with respect to the instrument alignment cube.

These values, in correlation with the instrument internal (including mounting error) alignment accuracy*, knowledge and stability will be used to compute the mechanical mounting accuracy knowledge requirement of the unit. For stability the appertaining time period must always be given.

**** Note:** The internal alignment is under the Orbiter Instruments's responsibility. It shall be compatible with the acceptable uncertainty specified.*

A1.1.8.6 Optical Reference Requirements

For any unit equipped with an optical reference cube, the normal to the faces of that cube shall define the Unit Optical Reference Frame (UORF).

The optical mirror cube shall be bonded with a suitable adhesive to a dimensionally stable part of the unit structure or module structure, in a visible and repeatable position.

This cube shall have the following characteristics:

- the minimum size of the faces shall be 15 x 15 mm,
- it shall have its faces perpendicular within 10 arcsec with Al reflecting layer and quartz coating;
- the quality of its surfaces compatible with auto-collimation techniques (planarity better than lambda /4)

If the item is not equipped with suitable surface for mounting the optical cube (e.g. in the case of light/small components such as thrusters), a dedicated built-in mirror cube alignment device, representative of item reference directions, shall be provided by the supplier to be mated with the item during the alignment measurement phase.

Their positions shall be agreed with ESA / prime contractor in order to account for System level integration constraints.

A1.1.8.7 Fine alignment

In case fine alignment is required, special tool/device (e.g. shimming) and dedicated procedures will be utilized.

Where "active alignment" is required, the means to adjust the unit (i.e. shims, screws, eccentrics...) shall be considered as part of the mechanical interface.

In addition a description of the adjustment method (including the value of the minimum and maximum tilt angle achievable) and of the adjustment hardware used for that purpose shall be submitted to the ESA Project Office / Prime for approval.

It shall be demonstrated that the adjustment activities will not introduce stresses in the instrument and in the spacecraft structure (or that the stresses are quantified and stay below an acceptable level).

A1.1.9 External Configuration Drawings

For each instrument unit, a configuration drawing is required to establish the mechanical interfaces with the spacecraft structure, harnesses and thermal hardware.

These drawings shall contain the following information:

- Dimensions and associated tolerances (at ambient temperatures), including feet, internal connectors and their dedicated clearance
- Focus position w.r.t. instrument coordinate system (dimensions and tolerances at operational temperatures)
- Identification of a reference hole
- Mounting hole pattern dimensions and hole patterns
- Dimensions of mounting feet and contact area (base-plate and mounting feet)
- Spot-faced area for seating of the mounting screw washers (if and where applicable)
- Dimensions and location of dowel pins (where applicable)
- Mass and associated tolerances (precise if estimated, calculated or weighted)
- Location, naming, type and function of all connectors
- Connector key shape orientation, the identification of connector contact “1”, showing connector in front view and the connector center line
- Information about connector fixation

- Identification of bonding studs
- Identification of non-flight items
- Location of unit and connector identification labels
- Details of instrument provided mounting hardware, thermal/electrical isolation provisions
- Location and routing of any harness interconnecting modules of a “stacked” box configuration
- Identification of free areas for harness fixation
- Calculated Centre of Gravity location in instrument unit co-ordinate system and Moments of Inertia and its co-ordinate system if different from instrument unit co-ordinate system
- Location of transport/storage purging connections (if applicable)
- Material of housing and surface finish
- Flatness and roughness of contact area
- Base plate material and surface treatment
- Surface coating (IR Emissivity and Solar absorptance if external location)
- Specific heat (J/Kg/K) (calculated or measured)
- Design and location of handling points

Drawings shall clearly specify the unit they represent and the responsible design authority; they shall be subject to a properly controlled numbering and revision updating system. Each revision of a drawing shall be accompanied by a list detailing all changes that have been incorporated since the previous revision on the drawing itself.

2D Drawings shall be submitted to the Project as computer readable and editable files, preferably in a vectorial file format (.hgl, .drw or .cgm (compatible MS word) , or pdf avoid definition loss) together with one hard copy of each file.

The Metric Standard (SI-SYSTEM INTERNATIONAL) shall be used for design and manufacturing of all instruments. For components and equipment, the dimensions shall be given in millimetres and the angles in degrees.

A1.2 Mechanical Design and Interfaces Requirements

A1.2.1 General

The mechanical design of the instruments structure shall ensure satisfactory performance of their intended functions during all phases of the ExoMars mission and for the required lifetime. The requirements must be satisfied under all specified environments for AIT ground handling and transportation, launch, cruise and Mars orbital operations. Equipment shall be designed for installation and removal from the spacecraft without disassembly of the equipment. All external

surfaces of flight hardware (including structural elements but excluding alignment references) shall have a surface treatment which shall prevent corrosion of the surface.

A1.2.2 Definition of Accommodation Envelopes

Based on the preliminary design of the Orbiter spacecraft, draft drawings of the mechanical envelopes, envelopes for thermal radiative surfaces, and for potential fields of view are provided in the following sections. All dimensions are indicative, TBC, only.

A1.2.2.1 Sun Deck Envelope and FoV

A1.2.2.1.1 Mechanical interfaces

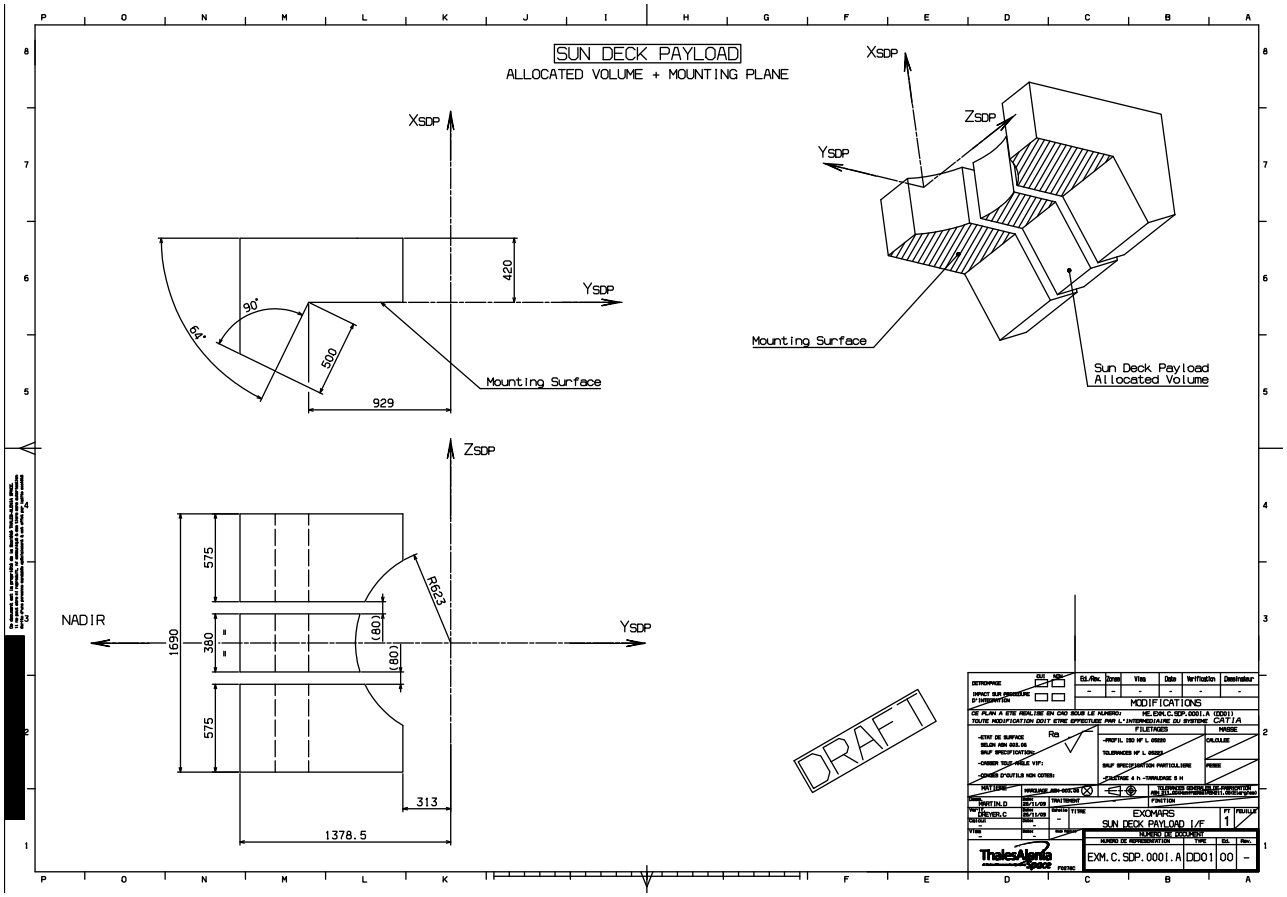

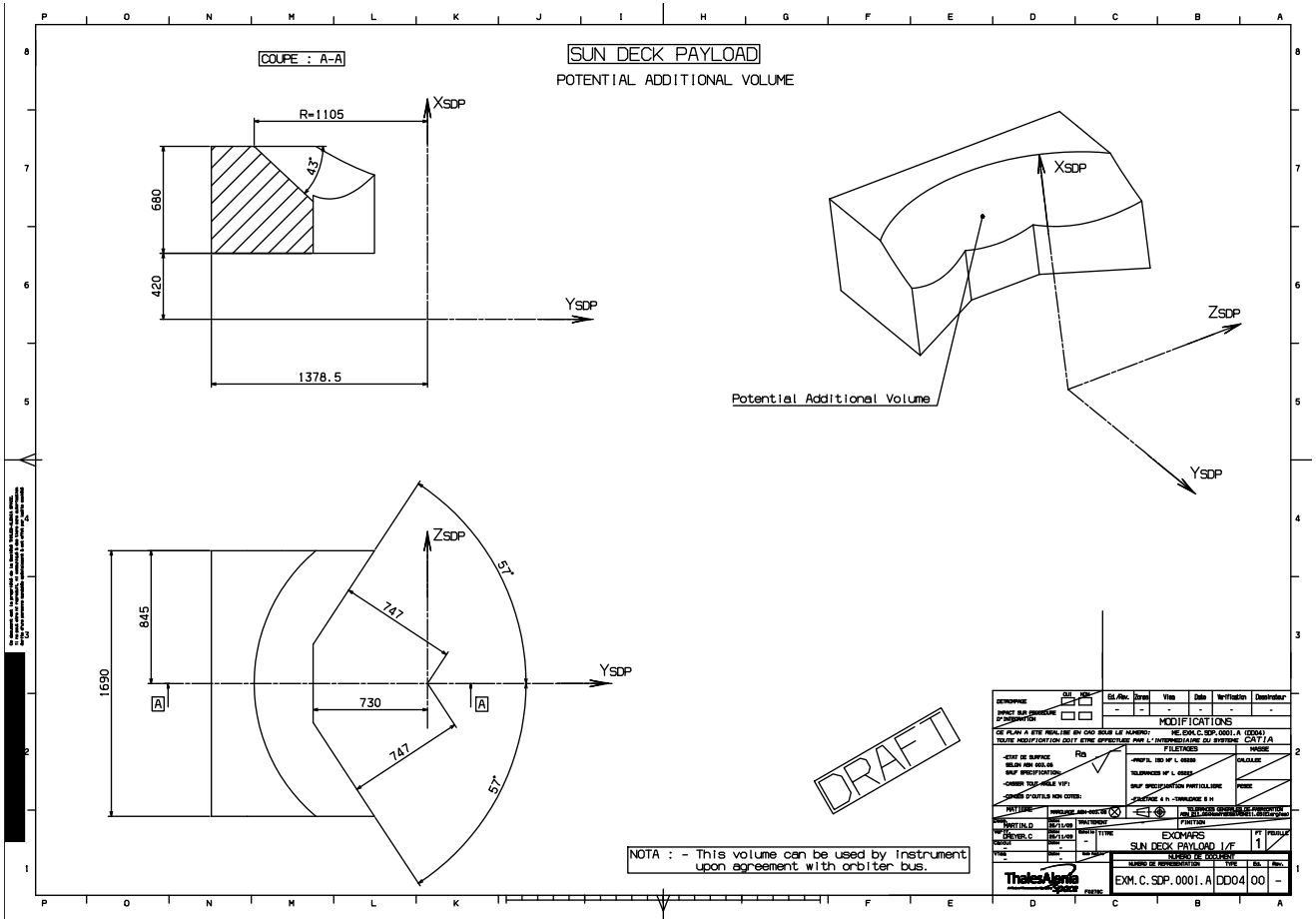
COUPE : A-A
SUN DECK PAYLOAD
POTENTIAL ADDITIONAL VOLUME
R=1105
XSDP
YSDP
ZSDP
43°
680
420
1378.5
Potential Additional Volume
845
1690
730
747
57°
A
DRAFT
NOTA : - This volume can be used by instrument upon agreement with orbiter bus.
EXOMARS
SUN DECK PAYLOAD I/F
EXM.C.SDP.0001.A
DD04
00
MODIFICATIONS
CATIA

A1.2.2.1.2 Thermal interfaces

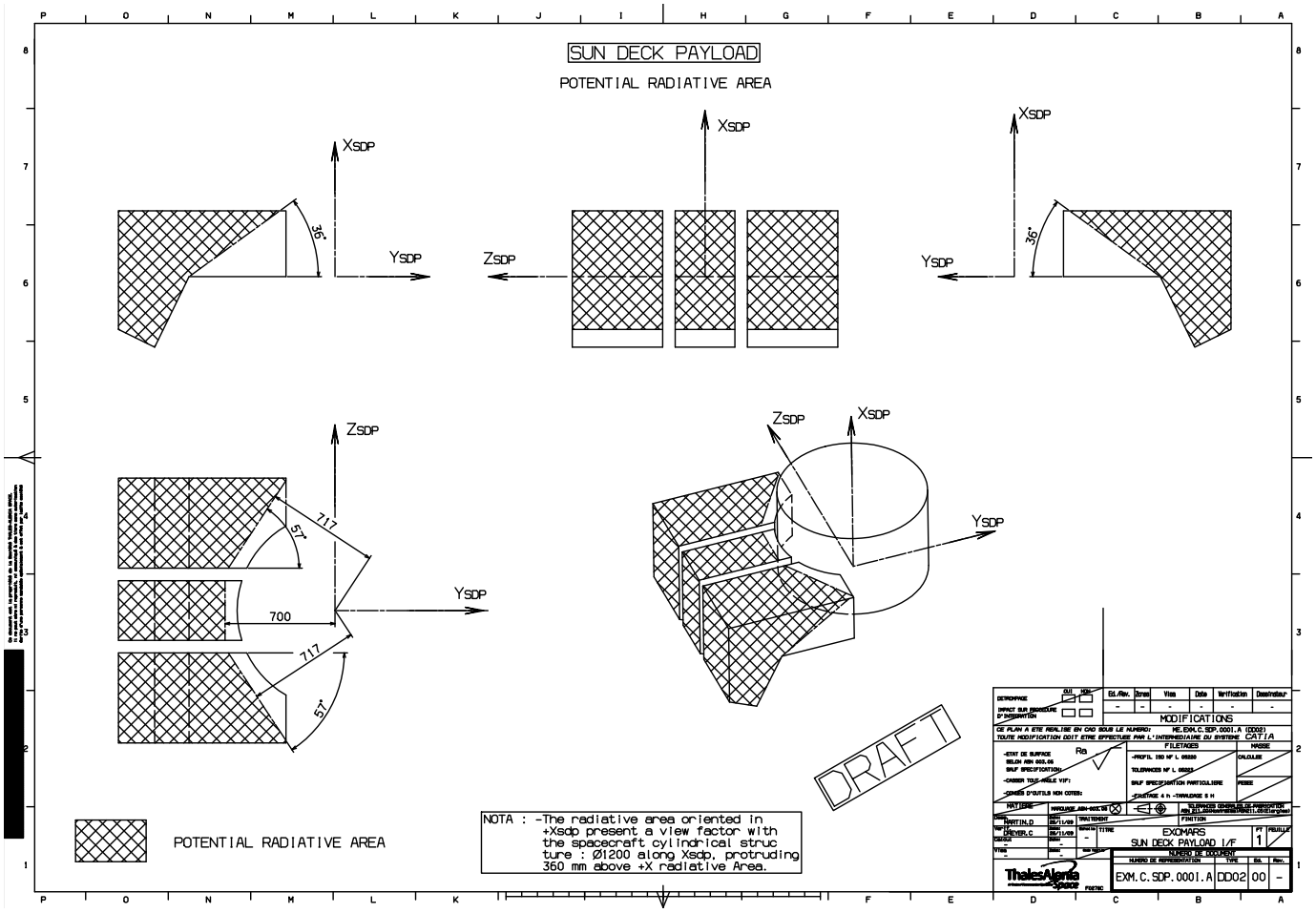

A1.2.2.1.3 Field of view

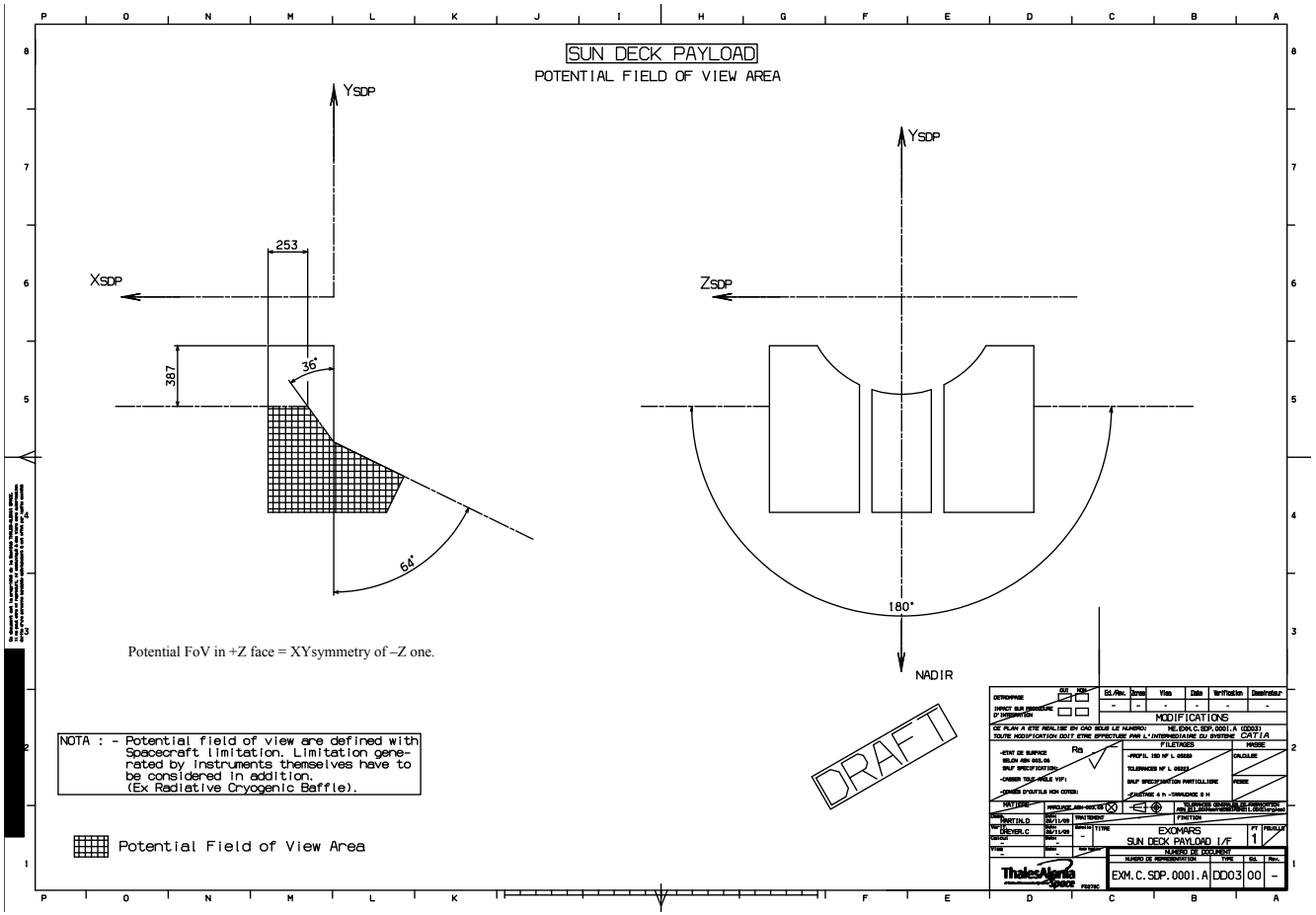

A1.2.2.2 Nadir Deck Envelope and FoV

A1.2.2.2.1 Mechanical interfaces

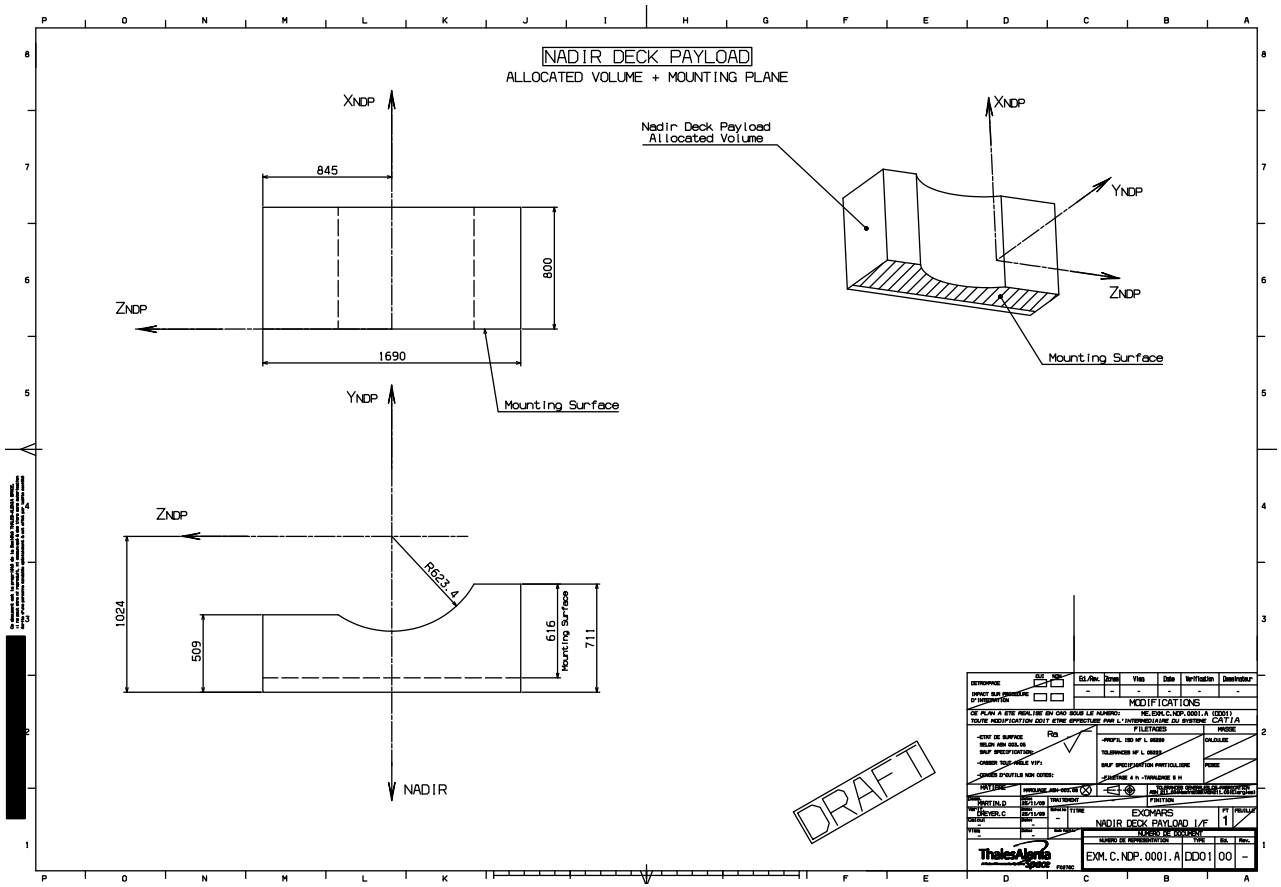

A1.2.2.2.2 Thermal interfaces

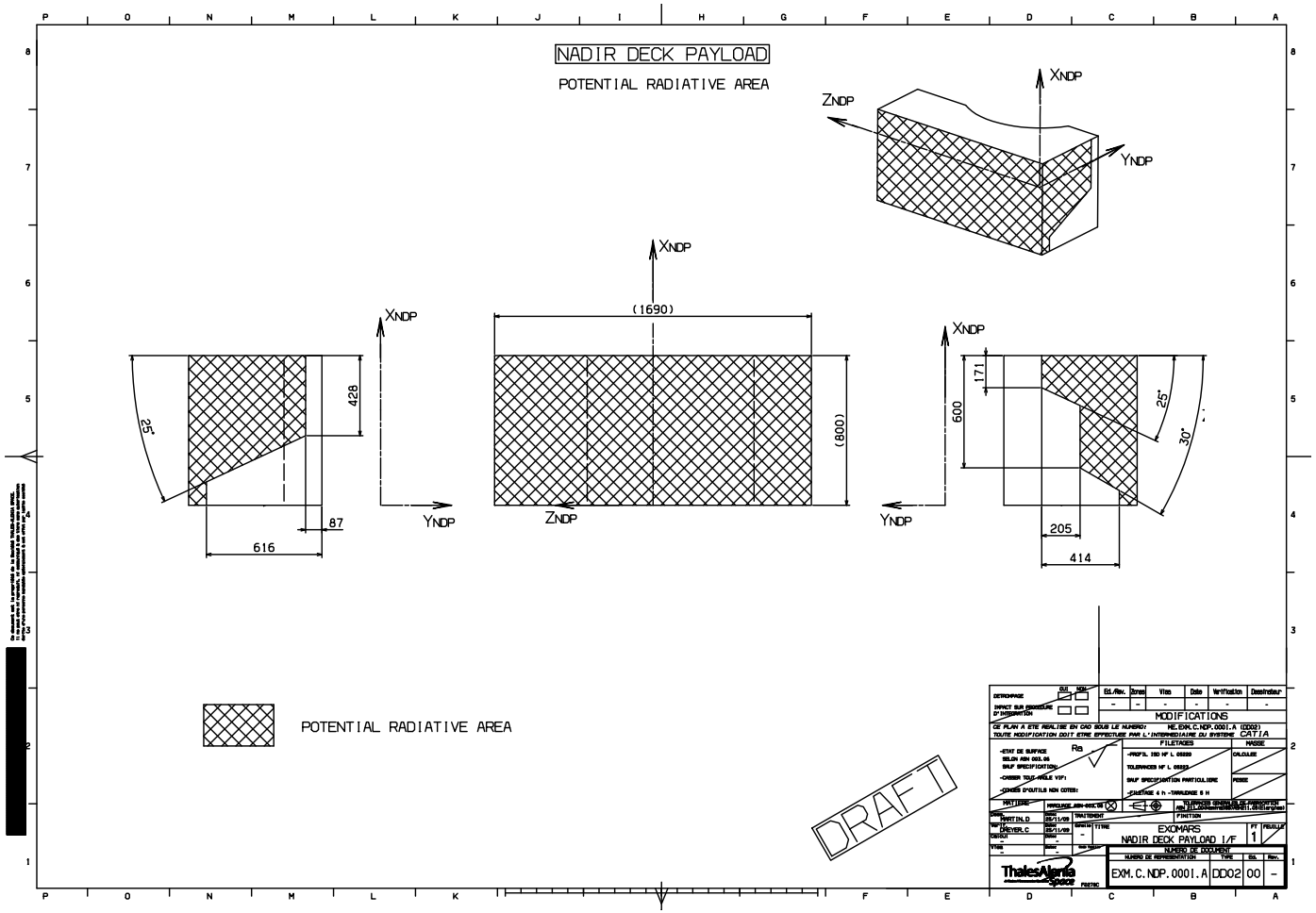

A1.2.2.2.3 Field of view

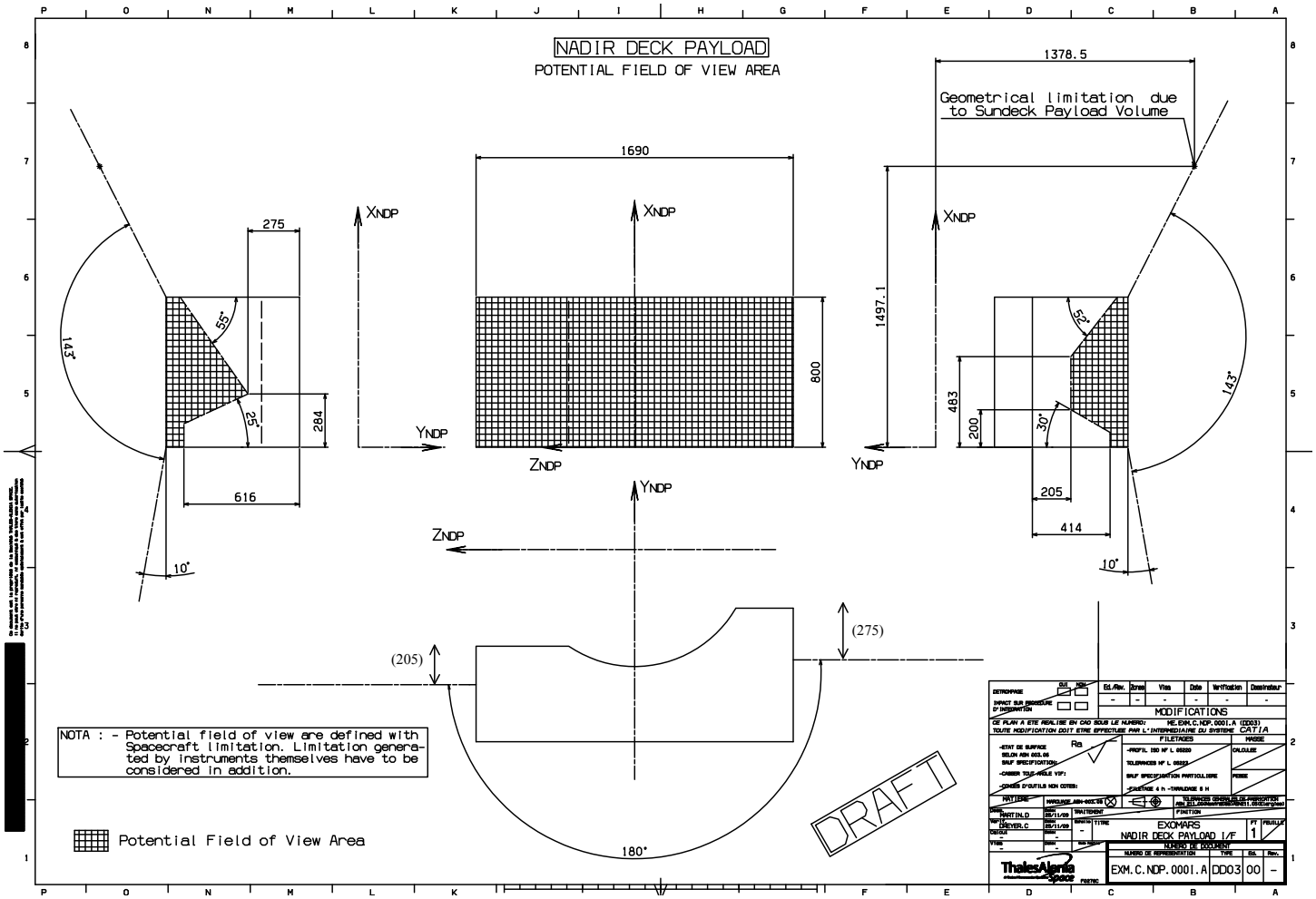

A1.2.3 Instrument mass/ centering requirements

Requirement 1 : Mass

The total payload mass shall not exceed 125kg including mass maturity margins.

The total payload mass on the sun deck (+X) shall not exceed 75kg including mass maturity margins.

The total payload mass on the nadir deck shall not exceed 75kg including mass maturity margins.

Requirement 2 : Global centering

The total payload mass laying on the sun deck shall respect the following CoG constraints :
- distance wrt X axis along Y direction < 950 mm
- distance from XY plane < 120 mm

The total payload mass on the nadir deck shall respect the following CoG constraints :
- distance wrt X axis along Y direction < 800 mm
- distance from XY plane < 30 mm

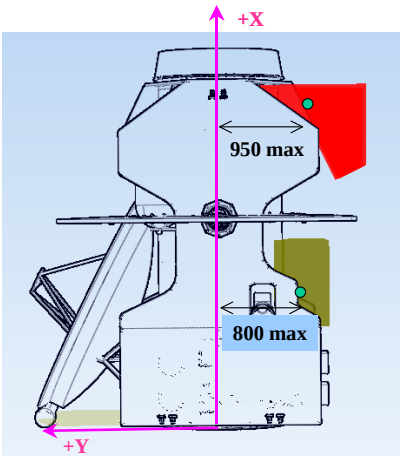

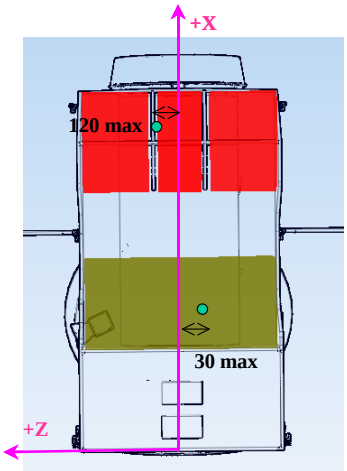

Requirement 3 : Local centering for sun deck instruments

Each payload sub-assembly located on the sun deck (= group of elements having a dedicated fixation on the satellite) shall have a CoG distance from X along Y direction lower than 1050 mm.

Requirement 4 : Local centering for sun deck instruments

Each payload sub-assembly located on the sun deck and nadir deck (= group of elements having a dedicated fixation on the satellite) shall have a CoG distance from the mounting plane (along X) lower than 500 mm.

A1.2.4 Mechanical Interface Control Document

The mechanical interface documents and related drawings shall define the mechanical interface and the physical configuration of the Item, reporting (as appropriate):

1. Description and drawing of the Reference Coordinate System. The origin has to be placed on the reference hole.
2. Definition of the reference hole/point (R). The reference hole has to be marked on the hardware, and the mark shown in the ICD.
3. External envelope dimensions of the completely assembled item both in launch and operating configurations, including non-structural items (e.g. thermal blankets).
4. Mounting Interface holes
   - hole pattern dimensions, position and position tolerance (identify reference features)
   - hole diameter size and tolerance.
5. Mounting Interface plane
   - Surface flatness tolerance
   - Surface finish (roughness)
   - Surface treatment/painting
   - Interface material
6. Mounting hardware definition (fasteners) and its mounting specification (tightening torque). Details of any washers, spacers, gaskets, etc. required for mounting, particularly when the unit has to be electrically or thermally isolated from the structure.
7. Mounting feet section
   - feet thickness
   - any washers required for mounting, particularly when the unit has to be electrically or thermally isolated from the structure
8. Base dimensional tolerances and specific tolerances where applied
9. Mass properties table
   - Mass
   - Centre of Gravity (CoG) position. It shall be related to the Reference Coordinate system
   - Moments of Inertia (MoI). They shall be related to a local reference coordinate system centered in the unit CoG and parallel to the reference coordinate system.
   - M.o.I. of rotating masses (if any)
10. Thermal hardware I/F
    - Thermal hardware drawings
    - Identification of areas dedicated to heaters, velcro and fasteners for MLI
11. Electrical hardware I/F
    - Identification of grounding points

- Identification of electrical connectors (with test connectors identified as such)
- Details of electrical hardware (bonding strap and connectors), including mechanical installation data referring to the connector identification codes.

12. Other hardware I/F
    - Identification of all components that interface with another item/subsystem (e.g. pipes, secondary structures or mounted items…)
    - Definition of their material, position and I/F (joint provisions as well)
13. MGSE I/F
    - Details of handling points
    - Details of interface to equipment Mechanical Ground Support Equipment (MGSE) as applicable
14. Purging/Venting I/F
    - Identification of venting hole location
    - Identification of purging connection
15. Alignment devices
    - Details of reference surfaces, reference marks, alignment mirrors and/or alignment cubes, including relevant lines of sight (when applicable) to be used for the alignment operation during integration.
16. Mounting position
    - Details of mounting position and orientation with respect to the spacecraft mechanical build axes (or panel axes if applicable) and indicating the reference surfaces and marks to be used for this operation.
17. Field of view
    - Where applicable, details and dimensions of entrance aperture view angles and requirements for clear field of view, giving origin of entrance cones.
18. Non-flight items
    - Details of any non-flight items used (i.e., alignment references, aperture covers, connector savers, connector plugs, test connectors and tie down safety bolts).
    - They shall be clearly marked on drawings as “Not for Flight”
19. Electro-Explosive Device (EED)
    - Identify EED items and/or pyrotechnic interfaces (if applicable)
20. Name plate
    - Report the nameplate and its position on the item

The instrument supplier shall be responsible for ensuring that the item complies with the relevant mechanical Interface Control Documents/Drawings (ICDs).

A1.2.5 Instrument Mounting

The attachment points of the instrument shall be designed to guarantee the compliance to the following general functional requirements:

- Ease of accessibility with standard tools to the attachment bolts during (de)integration of the equipment/subsystem to the spacecraft.

- The position of the connectors and grounding studs shall provide sufficient accessibility to enable the mounting and removal.
- The mechanical design of the mounting attachments shall contribute to a proper thermal control of the equipment/subsystem, by taking into account the thermal loads encountered throughout the mission lifetime.

The type and number of the bolts shall be defined to withstand the worst-case environmental conditions.
The instruments shall be through-bolted into threaded inserts in the equipment panels of the spacecraft. All mounting bolts shall be accessible from the top, i.e. from the side of the spacecraft panel where the equipment is mounted.
The contact surface of the attachment feet, and any other interface surface of the same unit, nominally lying in that same plane, should be flat to within 0.1 mm and with local variation not exceeding 0.1 mm over any 100 mm of length.
The contact surface of the attachment feet, and any other interface surface of the same unit, nominally lying in that sane plane, should have a surface finish equal to or better than 3.2 microns.
The surface of the mounting equipment structure should have a finishing Ra equal to or better than 3.2 microns.
Minimum contact area for unit mounting feet should be 1 cm^2 per mounting foot. Contact area for mounting on sandwich panel inserts shall comply also with the requirement as per ISO 2768.
Unless special conditions over-ride, the thickness of the mounting feet on each instrument should be 3.0 mm minimum.
Instruments mounting feet shall be adequately designed to accommodate screws and washers appropriate to the application. The access to and removal of the mounting bolts shall not be hindered by the unit or by the unit connectors or any other interconnections.
Titanium alloy fasteners and fasteners smaller than M5 are not allowed for safe-life design implementations.
All potential fracture critical fasteners are to be procured and tested according to approved aerospace standards or specifications with equivalent requirements. Safe life fasteners, after proof-testing or non-destructive inspection, shall be marked and stored separately.
Protective covers to preclude entrance of foreign particles to sensitive areas and to preclude damage during the handling, assembly, integration and test of the unit shall be provided.
These covers shall be either removable before flight or be part of the instrument and be deployed/retracted during the mission.
Removable protective covers shall normally be removed during system test, where flight configuration is mandatory, i.e. thermal vacuum testing or vibration testing.
Covers to be removed just prior to launch shall be accessible and easily removable at the launch site after complete spacecraft assembly and mating to the launch vehicle; such covers shall be removable without disassembly of any portion of spacecraft or unit.
Components up to 25 kg only can be lifted by hand. Above this, hoisting provisions shall be incorporated.
Attachment points shall be provided on the structures of mechanical parts to permit attachment of the necessary handles or hoisting/lifting devices, according to handling /integration needs.

The fixation items and washer shall be provided by PI.
Thermal washer shall not creep under preload induced stress.

A1.2.6 Mechanical Environment

The preliminary mechanical environment for the instruments is below reported in terms of:

- Sinusoidal Qualification Levels
- Random Qualification levels,
- Shock Qualification Levels,
- Launcher Expected Acoustic Induced Flight Environment.

Sinusoidal Environment (TBC)

The sinusoidal environment (Qualification Load levels) is following provided as function of the mass of the instrument. In Plane and Out of Plane are to be intended with respect to the mounting plane.

QUALIFICATION	mass	kg	0.5	1	2	3	4	5	10	15	20	25	30	35	40	45	50
LOAD	OOP	g	74	65	54	48	44	41	33	30	28	26	25	25	24	24	23
FACTORS	IP	g	44	39	32	29	26	24	20	18	17	16	15	15	15	14	14

The frequency ranges shall be:

any direction	
Freq. [Hz]	Level [g]
5	1
20	according to table
100	according to table

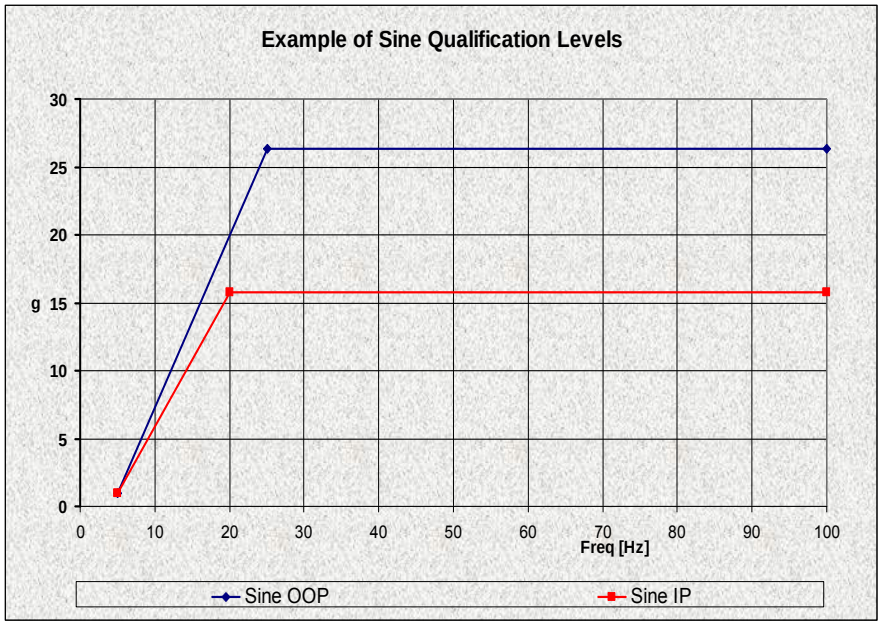

Random Environment

The random environment (Qualification Load levels) is following provided as function of the mass of the instrument. In Plane and Out of Plane are to be intended with respect to the mounting plane.

The levels reported in the following tables are TBC

QUALIFICATION LEVELS		
mass	random OOP	random IP
[kg]	[g^2/Hz]	[g^2/Hz]
0.5	0.96	0.41
1	0.74	0.32
2	0.51	0.22
3	0.40	0.17
4	0.34	0.14
5	0.29	0.13
10	0.19	0.08
15	0.15	0.07
20	0.13	0.06
25	0.12	0.05
30	0.11	0.05
35	0.11	0.05
40	0.10	0.04
45	0.10	0.04
50	0.10	0.04

In Plane and Out of Plane	
Freq. [Hz]	Level [g2/Hz]
20	+6 dB
100	according to table
400	according to table
2000	-6 dB

Shock Environment

The levels reported in the following tables are TBC

Instruments	
Shock Qualification Loads	
Freq. [Hz]	SRS Q = 10 [g]
100	25

300	400
2000	1500
10000	1500

Acoustic Environment

Note that the acoustic environment has been extracted from ATLAS launch System Mission Planners Guide, for ATLAS 4 meters fairings, pag 184, figure 3.2.2-1. For design and qualification purposes a factor +3 dB is to be added.

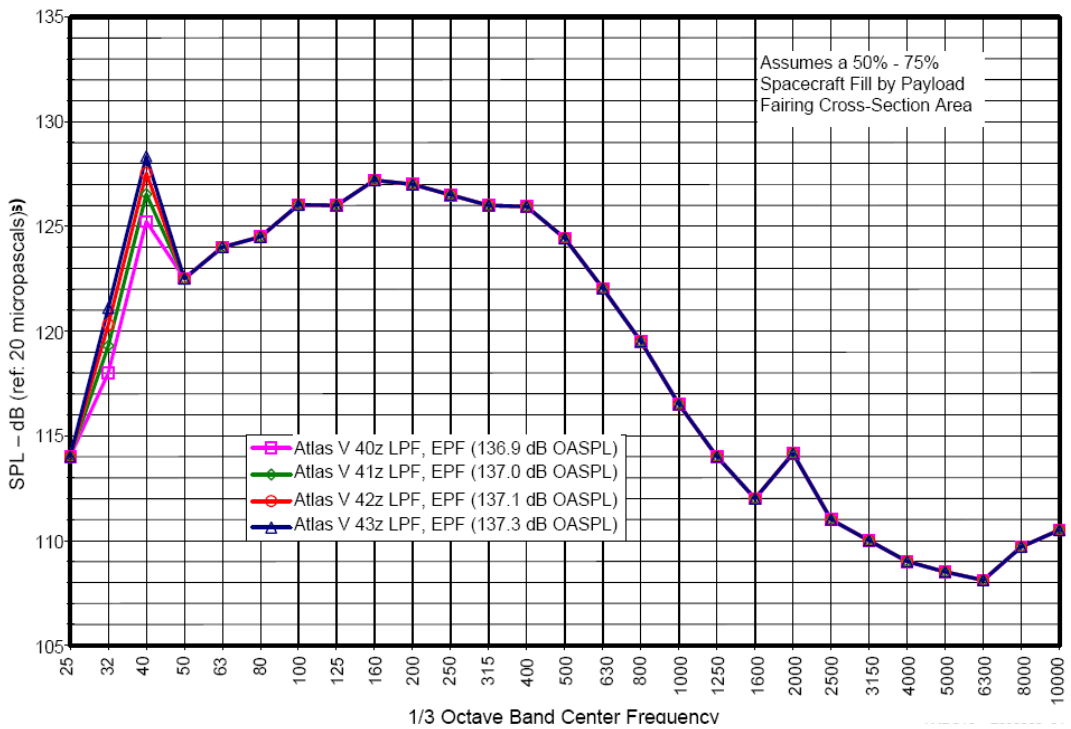

A1.2.7 Structural Design

The **first frequency** of the instruments, in hard mounted condition, **shall be greater than 140 Hz**.
The Instrument shall be designed to withstand the mechanical loads induced by the environment encountered during its entire lifetime:

- Fabrication and assembly loads (e.g. welding, interference fitting, etc.)
- Integration loads (as the structure is in non-complete assembled condition)
- Handling, hoisting and transportation loads
- Test load cases (including thermal stresses), representative for selected environment induced loads
- Launch loads: quasi-static, random/acoustic vibrations and shock (including ascent depressurisation)
- Operation loads (fluid pressure and mechanism actuation loads)
- Attitude and orbit control induced loads
- Thermal distortion induced loads

Following definitions are particularly used:

- **Limit Load (LL).** The maximum load(s) a structural item is expected to experience during its service life in specified environments with 99% of probability and 90% of confidence level. It consists of the estimated envelop of the above mentioned occurring loads.
- **Acceptance Test Load (AL).** The load applied during structural acceptance testing. The relevant limit load times acceptance test factor **(KA)** equals acceptance load: **AL = KA x LL**.
- **Qualification Test Load (QL).** The load applied during structural qualification testing. The relevant limit load times qualification test factor **(KQ)** equals qualification load: **QL = KQ x LL**.
- **Proof Load (PL).** Load applied during a proof test to pressurised flight structures or structural elements to verify integrity. Limit load times proof factor **(KP)** equals proof load: **PL = KP x LL**.
- **Allowable Ultimate Load/Stress.** The maximum load/stress that a structure or material can withstand without incurring structural failure; i.e. collapse, rupture or other inability to sustain the applied force.
- **Allowable Yield Load/Stress**. The maximum load/stress that a metallic structure or material can withstand without incurring detrimental deformation (less than 0.2% permanent deformation).
- **Load Factor**. The ratio of the inertia force acting on a mass to the weight of the mass.
- **Design Factor (KD)**. Factor defined at system level and applied to Limit Loads for providing specific over design against programmatic risks due to load uncertainty (e.g. protoflight approach, uncertainty in launcher environments, maturity of design) and against analytical model uncertainty. For ExoMars project the design factor shall include at least the product of the qualification factor K_Q by the Model factor K_M. An uncertainty factor called "model factor" K_M of 1.2 shall be taken into account for stress/loads derivation using FEM Models until the model has been successfully correlated by tests.
- **Design Limit Load (DLL)**. Load used for design purpose and Margin of Safety verification. It consists of the estimated envelop of Limit Loads multiplied by relevant design factor: **DLL = KD x LL**
- **Local design factor (K_{LD})**shall be taken into account to cover sizing/modelling complexity.
- **Design Ultimate Load/Stress (DUL).** Design Limit Load/Stress multiplied by the ultimate design factor of safety (**FOSU**) and local design factor (**K_{LD}**): **DUL = DLL x FOSU x K_{LD}**

- **Design Yield Load/Stress (DYL).** Design Limit Load/Stress multiplied by the yield design factor of safety (**FOSY**) and local design factor (**K_{LD}**): **DYL = DLL x FOSY x K_{LD}**
- **Factor of Safety (FOS).** Factor by which design limit loads are multiplied in order to account for uncertainty of the verification methods and uncertainty in manufacturing process and material properties (e.g. hazards, stress concentration, material property scatter, process-control variations, composites, corrosion effects and fatigue).

The Margin of Safety is defined as:

$$MOS = \frac{\text{Allowable Load/Stress}}{\text{Design Limit Load/Stress x Factor of Safety}} - 1$$

The allowable load (or stress) is defined in relation with the criteria of failure (i.e. yield, ultimate, fatigue, buckling). The margin of safety shall always be positive.
For computing the margin of safety the worst expected combination of environmental conditions shall be taken into account.
Additional Factors of Safety for designing, taking in account minimum material strength properties and stress concentrations shall be considered.
The following failure modes shall be considered in the design of the payload:

- Permanent deformation (yield)
- Rupture (ultimate)
- Instability (buckling)
- Gapping of bolted joints
- Slippage of bolted joints
- Degradation of bonded joints
- Loss of alignment of equipment and Instruments subject to alignment stability requirements
- Excessive deformation violating the specified dynamic envelope or causing functional failures (e.g. loss of attachment, loss of electrical continuity).

Structural items, shall be capable of withstanding, showing positive Margin of Safety, the worst expected combinations of mechanical and thermal occurring loads and environments including all test environments up to qualification level.
The following factors are to be taken in account:

KA = 1.0

KQ = 1.25 (for hoisting loads equal to 2)

KLD = 1.2 (In general for Composite structure discontinuities, Sandwich structures discontinuities, Joint and Inserts)

KM = 1.2

KD = KQ X KM

The factors of Safety **FOS** to be applied are reported in the following table:

Factors of Safety - FOS				
Structure Type	**FOSY**	**FOSU**	**FOSY**	**FOSU**
			Verification by Analysis only	**Verification by Analysis only**
Metallic	1.1	1.25	1.25	2
FRP		1.25		2
Sandwhich		1.25		2
Glass and Ceramic		2.5		5
Joints and Inserts		1.25		2
Buckling		1.25		2
Pressurized Hardware	1.1	1.25		

Preliminary design loads to be used for analysis as following:

DESIGN	mass	kg	0.5	1	2	3	4	5	10	15	20	25	30	35	40	45	50
LOAD	OOP	g	74	65	54	48	44	41	33	30	28	26	25	25	24	24	23
FACTORS	IP	g	44	39	32	29	26	24	20	18	17	16	15	15	15	14	14

A1.2.8 Payload Generated Disturbances

The Payload manufacturer shall define the instrument generated disturbances (i.e. internal mechanisms, etc.). First level estimates shall include the moving mass and the movement frequencies and characteristics.

A1.2.9 Instrument Mechanical Mathematical Models

The instruments developer shall delivered FEM models including proper documentation to show the main features of the models themselves and results of the checks.

The models, reproducing the structure in its static and dynamic main characteristics, shall be delivered in NASTRAN format following the guidelines provided in a dedicated specification.

Furthermore CAD models shall be delivered in a format to be agreed with TAS-I.

A1.3 Thermal Design and Interfaces Requirements

A1.3.1 Thermal Control Definitions

This section provides a list of term used in the context of Thermal Control.

- **Thermal Control sub-System (TCS).**

The TCS includes all H/W and S/W to control the S/C temperature, heat flows, etc.

- **Acceptance temperature range.**

Temperature range obtained from the qualification Temperature range after subtraction of qualification margins (generally 5°C) specified for the operating and non- operating mode and the switch-on of a unit

- **Qualification temperature range.**

Temperature range specified for the operating and non- operating mode and the switch-on condition of a unit for which this unit is guaranteed to fulfil all specified requirements.

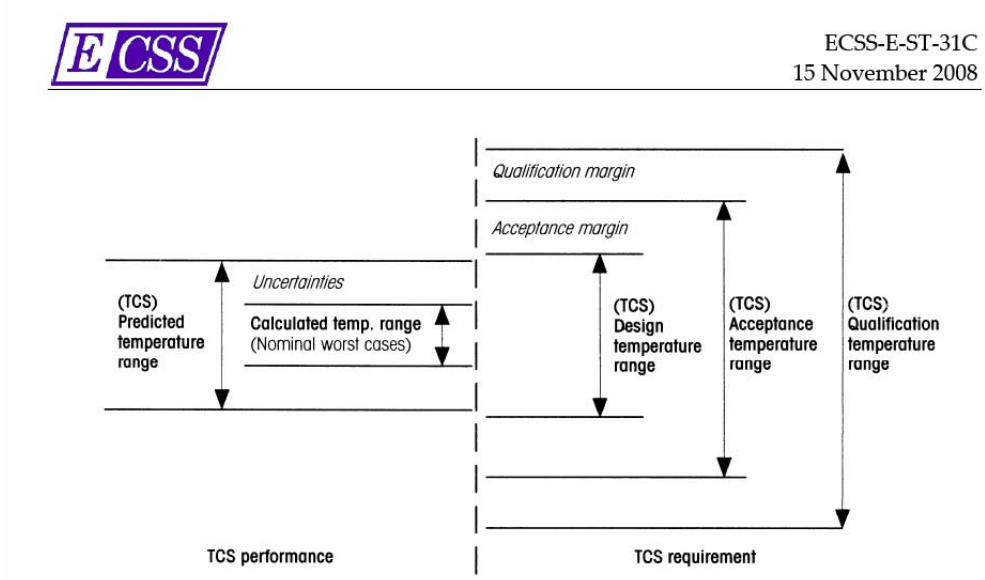

Figure A1.3-1 – Temperature definitions for TCS (taken from ESA ECSS-E-ST-31C)

- **Switch-on temperature**

Lowest temperature at which a unit can be safely switched-on.

- **Temperature/Thermal Reference Point (TRP).**

Physical point located on a unit and defined in the unit ICD to provide a simplified representation of the unit temperature (generally on unit mounting feet and applies to internally mounted unit).

- **System Interface Reference Point (SIRP).**

Physical point located on the S/C structure close to unit mechanical mounting Interface and controlled by TCS. It is used to evaluate the thermal interaction between a P/L unit (because decoupled and acting as an externally mounted unit) and the S/C.

A1.3.2 Thermal Environment

The continuous sun exposure shall be considered on instrument areas exceeding from the S/C envelope, baffles should be considered in case of need and agreed with System.

Instruments shall resist, in a not operative condition, to a max continuous exposition to sun of 20 min (TBC) during aero-braking, from any possible direction exposed to space.

A1.3.2.1 AIT and AIV phase

Thermal environment during AIT activities performed in clean room is 19÷25°C

A1.3.2.2 Launch site phase

At Launch site Payload Processing Facility (PPF) environments in the spacecraft processing areas are controlled at 21-27 °C (70-80 °F) and 50 ± 5% relative humidity.

A1.3.2.3 Launch phase

A1.3.2.3.1 Under fairing at Launch PAD

Atlas V Gas Conditioning Capabilities

			Temperature Range Inside Payload Fairing**	
			Atlas V 400 Series	Atlas V 500 Series
Location	Inlet Temperature Capability*	Inlet Flow Rate Capability, kg/min (lb/min)	LPF, EPF & XEPF	5-m Short, Medium & Long
Post-LV Mate Through Move to Launch Configuration	10-29 °C (50-85 °F)	Atlas V 400 Series 22.7-72.6 (50-160) Atlas V 500 Series 22.7-136.2 (50-300)	6-20 °C (43-68 °F)	6-20 °C (43-68 °F)
Post-Move to Launch Configuration	10-29 °C (50-85 °F)	Atlas V 400 Series 22.7-72.6 (50-160) Atlas V 500 Series 22.7-136.2 (50-300)	6-21 °C (43-70 °F)	6-21 °C (43-70 °F)

Notes: * Inlet Temperature Is Adjustable (Within System Capability) According to Spacecraft Requirements
** Temperature Ranges Are Based on Worst-Case Minimum & Maximum External Heating Environment.
Ranges Shown Assume a 72.6 kg/min (160 lb/min) for 4-m ECS Flow Rate
136.2 kg/min (300 lb/min) for 5-m ECS Flow Rate

A1.3.2.3.2 Launch, Ascent

Thermal environment during Launch is briefly summarized in the following table

Spin	3° per second (tbc)
Solar Irradiation	From 1322 to 1414 W/m² (average 1366 W/m²)
Earth Albedo	From 0.29 to 0.33
Earth I/R radiation	From 227 to 241 W/m²
Aerothermal flux	fairings jettisoning <1135 W/m2

Table A1.3-1 Space environment during Launch

A1.3.2.4 Early Operations phase

Environment during early operations phase is briefly summarized in the following table

Duration of the phase	10 days
Attitude	tbd
Solar Irradiation	From 1324 to 1416 W/m² (according to the season)
Earth Albedo	From 0.29 to 0.33 (as average value: 0.06 to 0.54 local)
Earth I/R radiation	From 227 W/m² to 241 W/m²

Table A1.3-2 Space environment during early operations

A1.3.2.5 Cruise phase

Thermal environment during Cruise to Mars is briefly summarized in the following table.

Instruments shall resist, in a not operative condition, to a max continuous exposition to sun of 12 min (TBC) from any possible direction exposed to space.

Duration of the phase	10 months
Attitude	-X sun pointed ; specific attitude during manoeuvres TBD
Eclipse	Duration TBD
Solar Irradiation	From 1428 (Earth) to 491(Mars) W/m² (1449 W/m² maximum during the mission at 0,97AU)

Table A1.3-3 Space environment during Cruise

A1.3.2.6 4-sol orbit phase

After EDL Demo separation from the S/C. To be completed.

A1.3.2.7 Aero-braking phase

The aero-braking is used to transfer the S/C from the 1 sol orbit to the 400Km orbit and this phase last from 6 to 9 months (from EDL Demo release until the final Science Orbit is reached). During this phase the S/C periapsis will be at about 100-120.Km; so at the perimars the S/C will slow down due to the aerodynamic drag of Mars atmosphere and therefore for several minutes the exposed surfaces will be subjected to the fluxes reported hereafter.

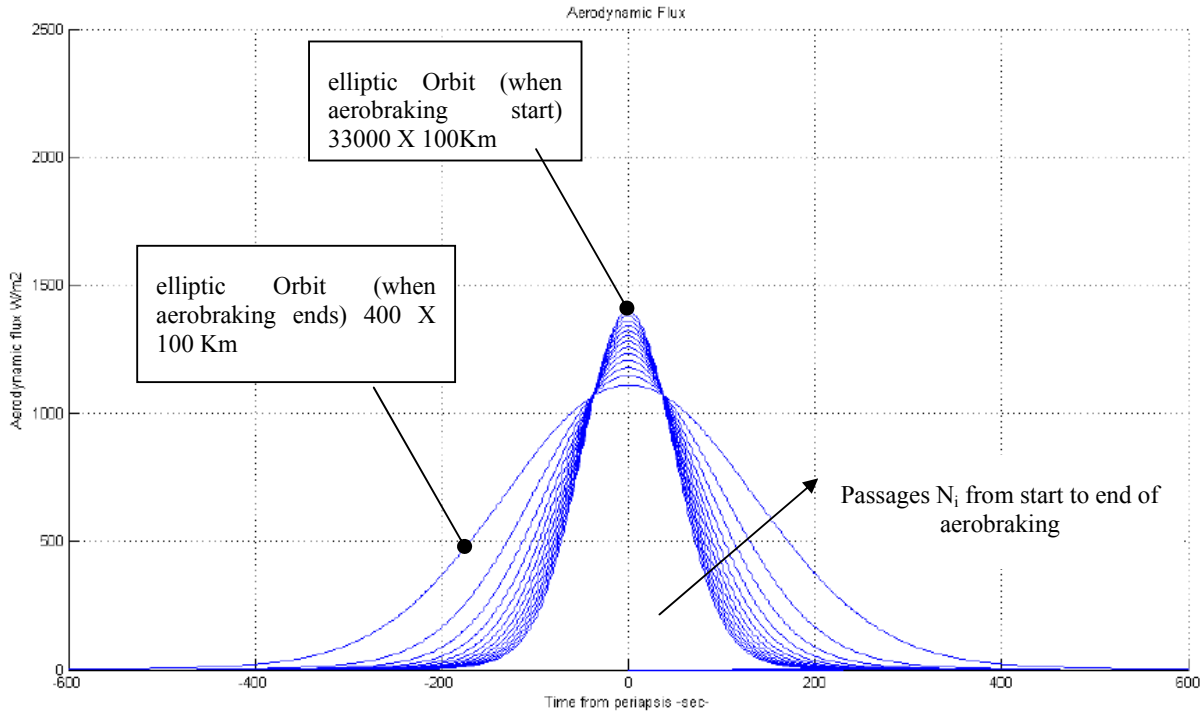

Figure A1 6 Preliminary evaluation of dynamic flux during aero-braking at perimars (taken from TAS-F Orbiter Mechanical Thermal and Propulsion Subsystem Specification, EXM-CM-SPE-AF-0282 is 02 draft)

For the aero-braking phase the instrument will consider on instrument areas exceeding from the S/C envelope a superposition of the following contributions:

- Specified aero thermal flux on –X face side
- Sun exposition to any of the spacecraft face (different cases) during 20 minutes

The safety factor to be used is 2 on the aerodynamic fluxes plus on local trap area an additional factor 2.

The sun exposure shall be considered on top of aero-braking flux with factor 2 for non flat area.

A1.3.2.8 Mars Science phase

Thermal environment during Mars Science orbit is briefly summarized hereafter.

Thermal fluxes over one orbit on each Orbiter side, corresponding to the direct average fluxes seen during Orbiter lifetime, are reported. They are extracted from the detailed fluxes plots below which are obtained considering an average albedo of 0.28.

Flux type [W/m2] / Orbiter side	+X [min/max] (*)	-X [min/max] (*)	+Y [min/max] (*)	-Y [min/max] (*)	+Z [min/max] (*)	-Z [min/max] (*)
Mars I/R flux	0/33	0/43	0/0	20/135	5/36	5/36
Solar flux	0/0	210/700	20/240	18/90	0/18	0/18
Mars Albedo flux	0/10	0/15	0/0	5/50	5/11	5/11

* min and max values do not cumulate because they do not happen at the same day, as can be seen in the next figure

- CONF4a layout

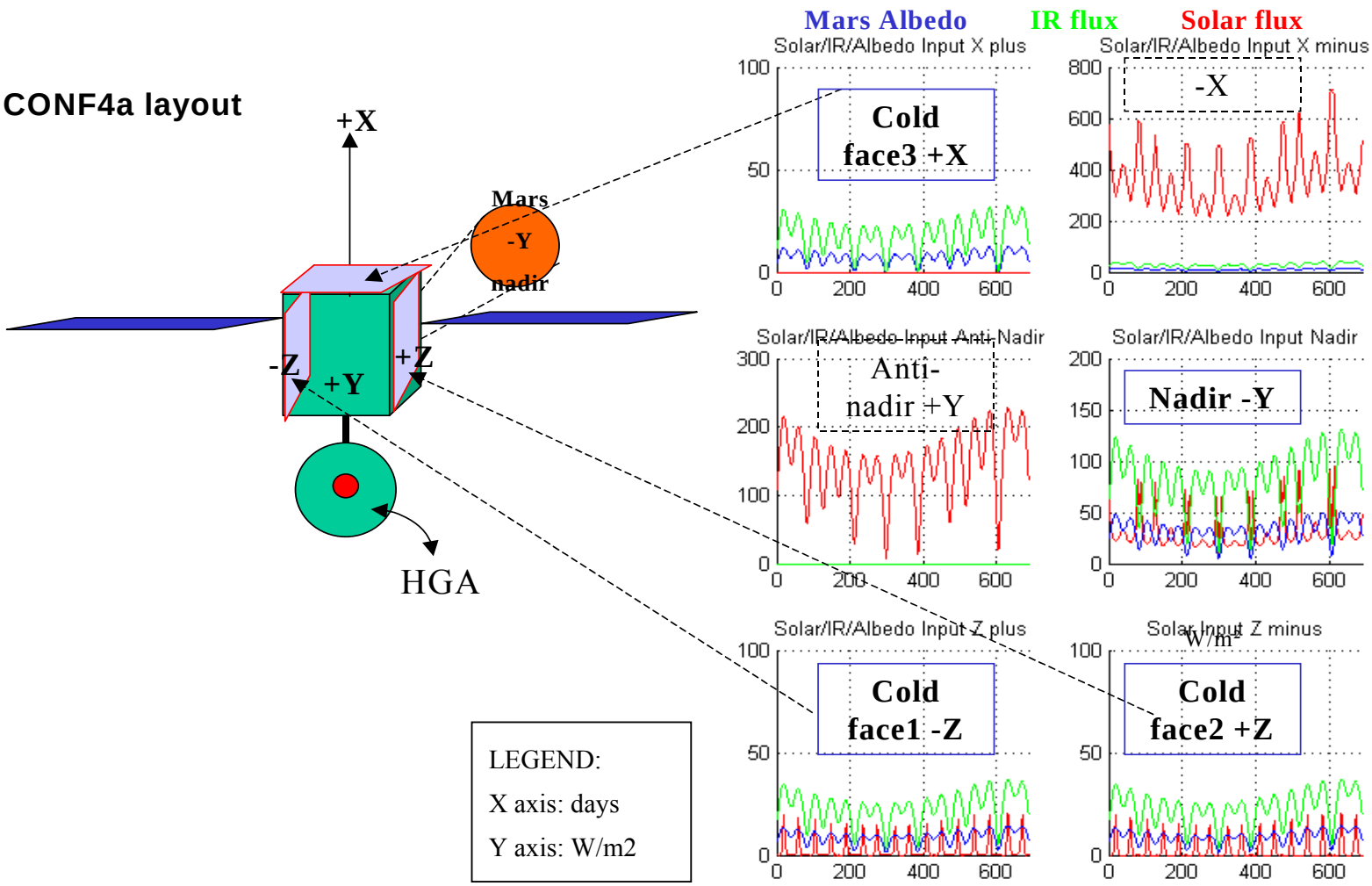

Duration of the phase	About 2 years of science
Date	From mid 2017 till mid 2019
Solar Aspect Angle	Variable
Attitude	Nadir pointing, –Y toward Mars
Spin	No, only Yaw steering
Eclipses	max 42 minutes
Solar Irradiation	From 715 to 491 W / m²
Distance from Mars	400*400 km
Mars Albedo	Average value to be used for cold cases: 0.18 (tbc)
	Average value to be used for hot cases:0.35 (tbc)
Mars average equivalent temperature for I/R flux evaluation	210K (tbc) min in sunligth to be used for cold cases
	150K (tbc) min in shadow to be used for cold cases
	260K (tbc) max in sunligth to be used for hot cases
	180K (tbc) max in shadow to be used for hot cases

Table A1.3-4 Space environment during Mars Science orbit

A1.3.3 Thermal Interfaces, Design Guidelines, Requirements and Responsibilities

1. Instrument thermal design is responsibility of PI's,
2. The PI's are responsible for developing a thermally isolated (conductively and radiatively) interface between the instrument and the Orbiter bus. Instrument provider is responsible for maintaining required component temperatures independent from Orbiter design. .In case of highly dissipative electronics which can be separated from the rest of the Instrument, the possibility to conductively couple the electronic boxes to the SC can be evaluated case by case. In this option the maximum allowed distance between detector and electronics should be specified by the proposers.
3. Heaters, cryo-cooler and temperature sensors shall be controlled and activated from the instrument itself.
4. Sizing, design, procurement and integration of washers, heaters, temperature sensors, MLI, coolers, radiators (including baffles and covers for Cruise and aero-braking phases, if needed) are under instrument responsibility. Thermal control H/W including thermo-electric devices such as heaters or coolers, must be included in the mass, power and

volume budgets of the instrument. Detailed budgets for any phase and mode (Cruise, survival, stand-by, off, science, etc) shall be provided.

5. Instruments, especially the main parts as optics, focal plane, etc, are supposed to be thermally insulated from the S/C. A linear conductance value of 0.02 W/K (tbc) (including interconnecting harness and grounding) is allowed for each instrument. Also radiative insulation by means of MLI is foreseen. In this case the unit bottom should be at least 5 mm far from Orbiter mounting plane to allocate some space also for MLI underneath.

   However, specific instrument thermal I/F needs, e.g. relevant to high dissipation instruments, will be evaluated on a case-by-case basis.

   Also auto temperature control system, if needed, shall be designed tested and provided by instrument supplier.

6. The Instrument radiators shall be designed in such a way not to interfere with the field of view of any other Instrument.

7. Envelopes and viewing constraints for Instrument radiators are described in chapter A1.2.2.

8. During Launch and Cruise, until the EDL Demo separation from the Orbiter, the V.F. to space of instrument radiators will be reduced by its presence especially in the +X direction, the one which should be the coldest during science operations. Therefore in case functional checks are needed before EDL Demo separation, this effect should be taken into account by the instrument supplier. To avoid the risk of multiple reflections on radiators (if not acceptable also in cruise from instrument) shutters or similar covering on radiators should be considered.

9. The following Instruments Thermal design Interface temperatures will be guaranteed by the Orbiter at the **SIRP (**Interface point at experiment mounting point on S/C side) of any instrument.

Temperature Range at SIRP for Instruments	Minimum non-operative/ start-up	Minimum operative	Maximum operative	Maximum non-operative
	-30 °C	-20 °C	+40 °C	+50 °C

   Note: Qualification margins of are +/-10°C (and acceptance ranges +/-5°C) above/below design ranges are supposed to be taken during unit internal design.

10. Substitution heaters (Instrument off) shall be controlled by Instruments, with power lines provided by Orbiter bus.

11. All data relevant to TCS, including the overall experiment power dissipation during survival/stand-by, shall be included in the experiment dedicated interface control document (E-ICD)

12. For available surface for radiators and FoV limitations refer to para. 5.2.3

A1.3.4 Instrument Thermal Mathematical Models

Instrument shall provide both detailed and reduced/simplified Thermal Mathematical and Geometrical models (TMM and GMM, RTMM and RGMM respectively). A document including corresponding models description and an Analyses Report document shall be provided.

Instrument RTMM and RGMM will be integrated on the Orbiter Mathematical models in order to perform the overall system thermal analyses.

The Experiment TMM and GMM shall reproduce the unit behavior from a thermal point of view, therefore shall be representative for the following characteristics:

- Contact area
- Overall dimensions
- Radiative Area
- Thermo-optical properties
- Conductances
- Dissipations in each mode (stand-by, operating, survival, etc)

A dedicated document with TMM/GMM detailed thermal modelling requirements (including maximum number of nodes, nodes identification, S/W tool etc) will be provided to the instrument supplier.

TMM and GMM respectively shall be provided in ESATAN and ESARAD format (or ESATAN TMSv2).

A1.4 Electrical Power Design and Interfaces Requirements

A1.4.1 Power Quality – Unregulated Bus

The satellite EPS will generate, control, monitor, and distribute electrical power to the spacecraft users from the unregulated bus, and manage battery charge and discharge to fulfil the power demands throughout all mission phases.

A1.4.1.1 Power Voltage

The Instruments shall be operative with nominal performance within an input voltage range between +22 and +36V (unregulated bus).

Fuses inside Instruments are forbidden.

Each Payload will receive a redundant unregulated voltage line protected by a Latching Current Limiter as described in Section A1.4.2.

Each secondary voltage required by the instrument shall be generated by the instrument itself.

The instrument shall switch-on receiving the unregulated voltage in input plus a dedicated power-on telecommand which acts on an Instrument internal relay. Note: this approach ensures that it will be always possible to power off the Instrument in case either LCL or relay fail closed.

Substitution heaters will be supplied via dedicated power lines.

A1.4.1.2 Redundancy

The instrument will be provided with two independent power lines routed via two dedicated connectors. The instrument shall be designed accordingly.

Note: In case of failure, both the nominal and the redundant power lines may be applied simultaneously therefore isolation shall be included in the instrument to avoid loss of one power source by a failure in the other power source.

A1.4.1.3 Voltage fluctuation

The Instrument shall survive an abnormal bus voltage between 0V and 40V.

A1.4.1.4 Input protection

All relays (internally to the unit) used to switch ON/OFF units directly interrupting primary power shall be protected such that the peak voltage, across the contact at switch-off, does not exceed 1.1 times primary power voltage.

The Instruments shall be protected against unintentional application of reversed power supply.

The Instruments shall survive without any damages to an inadvertent switch-off.

A1.4.1.5 Undervoltage

The instruments shall be design to withstand the undervoltage management performed by the PDU described in this chapter.

The PDU will switch off all not-essential loads automatically in the event of reaching a low voltage level (corresponding to the battery energy only able to maintain all essential loads for a time guaranteeing safe recovery).

The instruments are considered NON essential load.

Informative note:

The non-essential load disconnection circuit shall

1. produce a hard-wired signal within the power system, and
2. shall be one failure tolerant.

After recovery from the under-voltage condition:

1. all essential loads shall be supplied nominally, and
2. all non-essential loads shall be in a known configuration that cannot create damage to any part of the spacecraft.

A1.4.2 LCL Characteristics

A1.4.2.1 LCL Classes

PDU output line LCL shall limit output current to the listed values in Table A1.4-1 below within 50µs after any fault load conditions.

LCL	Nominal Current	Output current limit (I_{TRIP})
Class 1A	≤1A	1.3A±2.5%
Class 2.5A	≤2.5A	3.25±2.5%
Class 5A	≤5A	6.5±2.5%

Table A.1.4-1 LCL nominal current and maximum limited current

The leakage current of any LCL (current with LCL in off) shall be limited to lower than 1mA.

Note: LCL trip-off time is defined in A1.4.2.2.

A1.4.2.2 In-rush Current

At switch-on/off and for any mode change, the in rush charge (current x time) to any unit shall be limited to the one shown in Figure A.1.4-1.

In particular:

- Ipeak < 30A
- di/dt < 1 A/µsec
- Trip-off time at UNIT LEVEL=7.5ms

The test shall be performed considering the maximum and the minimum voltage bus to the loads (e.g. 22-36V for unregulated bus)

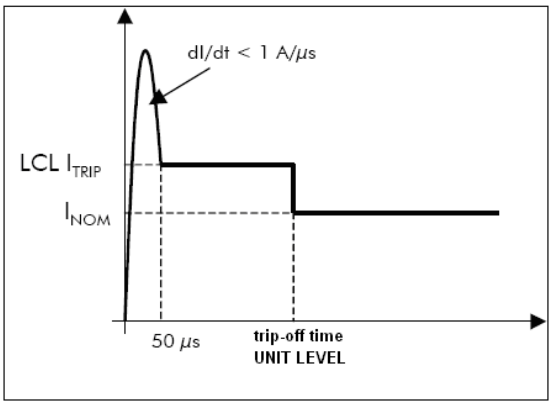

Figure A.1.4-1 - In-rush Current Slope

Measurement Set-up

1 - The inrush current shall be measured on the positive power line of each user connected to LCL. The current probe shall be connected near the load and the load connections shall have a limited length.

The voltage measure shall be performed near the LISN outlet and it shall be performed for engineering analysis / investigation.

2 -The unit shall be powered by using the LISN defined in paragraph A1.4.4, when switching it ON with an external bounce-free relay (e.g. laboratory mercury relay) installed between the LISN and the user on the positive power line.

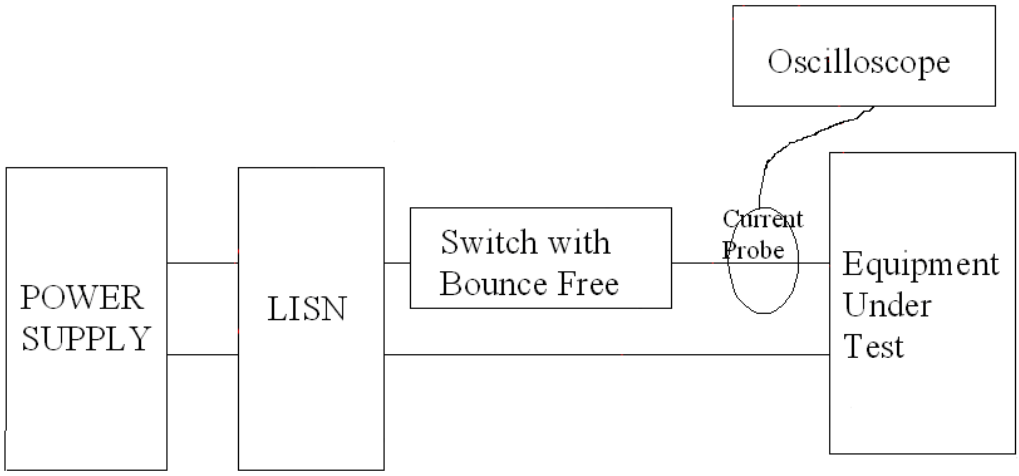

Figure A1.4-2 In Rush Current

The stability of current limiters shall be ensured by the user for the actual loads characteristics, verified by analysis under worst case conditions, and tested under a set of cases agreed with customer

A1.4.2.3 DC-DC Stability

The phase margin of converters and regulators not belonging to the spacecraft power system shall be at least 50° and the gain margin 10 dB for worst case end–of–life conditions with representative loading.

The Figure A1.4-3 shows the maximum impedance to the loads inlets.

The Table A1.4-2 reports some point of Figure A1.4-3.

Frequency [Hz]	Impedance [Ω]	Frequency [Hz]	Impedance [Ω]	Frequency [Hz]	Impedance [Ω]
100	1.94	50k	35.90	400k	283
1000	2.07	100k	71.52	500k	356
10k	7.41	200k	142.5	800k	560

Table A1.4-2 Output Impedance for Unregulated Bus (worst case)

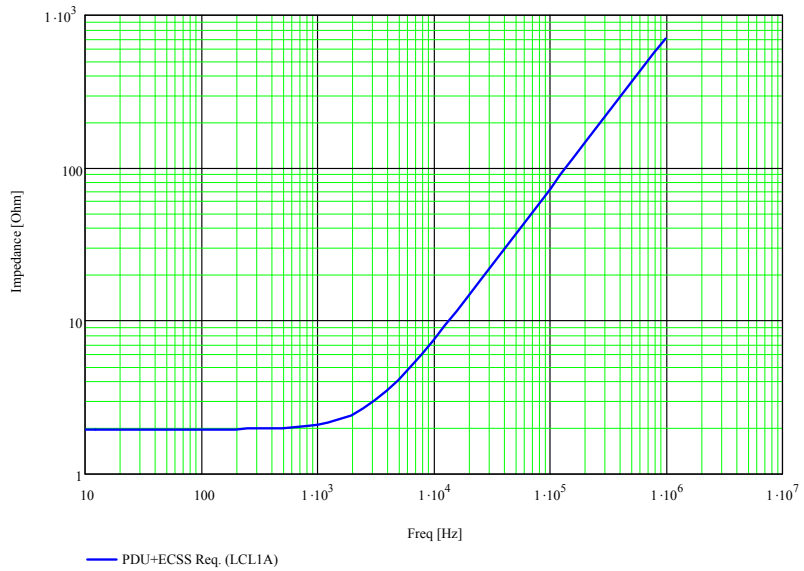

Figure A1.4-3 Output Impedance for Unregulated Bus (worst case)

The cross over of the 0 dB line in open loop measurement shall be in one single point only.

A1.4.3 Ripple and Spikes

The power distribution system will not generate a ripple voltage at the main bus or at other distribution points with a peak-to-peak magnitude greater ±250mVP.

The power distribution system will not generate spike with peak greater than ±3VP.

The spikes are defined as transitory high frequency oscillations with duration lower than 10µs and without a repetitive period.

A1.4.4 Line Impedence Simulation Network (LISN)

For all conducted emission and susceptibility tests on subsystem and unit level a LISN, simulating the ExoMars primary power bus impedance, shall be used.

Paragraph A3.4.1.1 provides further details.

A1.5 Data Handling Design and Interfaces Requirements

A1.5.1 General

The Data Handling Subsystem (DHS) manages all the data associated with the operation of the Orbiter, the main supported functionalities are:

- Mission control (timeline and FDIR)
- Receiving and Dispatching telecommands
- Orbiter S/S management (power, thermal and TTC)
- Collecting, Storing, Transmitting to Ground all telemetry data (i.e. science data, events and housekeeping data (HK) originated both from the Orbiter and the Instruments).
- Payload management in particular
  - TC dispatching including Mode commanding
  - HK TM acquisition and storage
  - Time distribution
  - Science data acquisition and storage
- Communication on internal buses and serial lines

In order to collect science data, the interface between the DHS and the Instruments shall be implemented using a *SpaceWire* link according to ECSS-E-50-12C (SpaceWire - Links, nodes, routers and networks). The *MIL-STD 1553 bus* has to be used for the Command and control interface. Any deviation from these standards shall be strongly justified in the proposal.

The protocol to be implemented for communication on the 1553 bus is TBD.

The Instruments shall autonomously implement their own computing function, without relying on any Orbiter OBC support.

Instruments are expected to implement at least the following modes (modes naming only given for illustrative purposes):

- OFF
- STANDBY
- OPERATIONAL

The OFF mode does not need any power and any interaction with the Platform.

The STANDBY mode is a safe mode in which the instrument is powered and generates only HK telemetry.

The OPERATIONAL mode is the mode in which the instrument is fully operative and generates HK and science data

A1.5.2 Instrument Commanding

The Orbiter Bus DHS processes (i.e. check the format and protocol validity) and distributes both Ground and on-board generated commands to the end users according to the foreseen protocols.

Cmds will be sent by the Orbiter Bus to the Instruments over the MIL-1553B bus.

The maximum command rate to be supported by the instrument has to be TBD commands per second (the figure has to be agreed with the Agency).

Timing constraints in commanding the instrument shall be agreed with the Agency.

The Instrument shall validate the received commands prior their execution.

Instruments shall manage and perform by their own their modes transition without needing more than one command from the platform.

Execution of vital Instrument functions (functions that, if not executed or wrongly executed, could cause permanent degradation), shall be implemented by 2 separate commands (i.e. arm and fire).

A1.5.3 Instrument Telemetry

The Instruments must be operated in a way compatible with the available resources. Data volume varies from 4.8 Gbits/day (at max distance, limited by downlink volume) to 15.0 Gbits/day (at min distance, assuming unrestricted use of mass memory capacity and 8 hours of ground station coverage).

If necessary, data compression algorithms can be used for science data to fulfil the above allocated telemetry bandwidth but these algorithms shall run in the instrument CPU.

The Instrument has to report in the HK data all parameters necessary to have full observability of on-board status and operations (e.g. health status, operating mode, SW parameters, etc).

The maximum 1553 allocated bandwith for Instruments HK is 20% (overall for all the Instruments).

Payload HK TM packets shall be provided with a frequency lower or equal to 1Hz.

The proposed protocol for the science data link is the ECSS-E-ST-50-12C (SpaceWire - Links, nodes, routers and networks) with the 'CCSDS packet transfer protocol' as defined in ECSS-E-ST-50-11C (SpaceWire protocols).

Each instrument SpaceWire nominal and maximum data rates shall be defined and agreed with ESA/NASA..

Instrument should comply with the following standards:

- CCSDS 102.0-B--5 Packet Telemetry, Blue Book, Issue 5, November 2000
- CCSDS 203.0--B--2 Telecommand Part 3 -- Data Management Service, Blue Book, Issue 2, June 2001

A1.5.4 Onboard Time Distribution

The Orbiter DHS maintains a time code pattern as Spacecraft Elapsed Time (SCET), according to the format in the figure below:

Coarse Time				Fine Time	
0 7	8 15	16 23	24 31	32 39	40 47
Byte 0	Byte 1	Byte 2	Byte 3	Byte 4	Byte 5
2^{31} 2^{24}	2^{23} 2^{16}	2^{15} 2^{8}	2^{7} 2^{0}	2^{-1} 2^{-8}	2^{-9} 2^{-16}

The SCET is considered as the Central Time reference (CTR) and it is used for on-board reference for correlation with Ground.
The Central Time Reference (CTR) is maintained at spacecraft level and distributed to the Instruments in order to time-tag their data, if necessary.

A1.5.5 Solid State Mass Memory

All the scientific data generated by the instruments, as well as the housekeeping data, will be stored in a Mass Memory for their downloading. No immediate forward to ground of the stored data is foreseen.
Data storage volume allocated to all Instruments is 30 Gbits TBC.

A1.5.6 Discrete Signals

The current design foresees the following discrete signals

- 2 Main + 2 Red. High Power Pulse Command (these commands shall be used to switch ON/OFF the main power of the Instrument)
- 2 Main + 2 Red. Bi-level monitor for the above commands (status ON/OFF)

All other commands and HK TM shall be routed from/to central computer via the 1553 bus.

A1.6 Software Design and Interface Requirements

A1.6.1 Software Design Requirements

A master/slave polling based scheme has to be fulfilled for data exchange on I/F data busses being the CTU always the master of the communication.

Minimum boot software shall reside in PROM. It should guarantee at least dump/patch capabilities, preferably for all memories, and basic communication with the Orbiter DHS.

Instrument SW shall guarantee patch/dump capabilities for all memories through 1553 bus.

The Instrument software (ISW) should have a modular structure, in order to allow independent development, testing, and modification of software modules.

The ISW should be designed such that its execution shall be deterministic and under all load conditions permitted by the nominal operation the software should complete its functions within the allocated time.

An event report should be generated when the SW detects a failure condition (e.g. .a data bus error, a checksum error, alarms, etc).

In case (some of) these event reports shall be processed and reacted on in the EXM Orbiter MOC, then these event reports have to be compliant with format and data definitions as specified by ESOC.

It should be possible to modify individual software parameters or constants by dedicated command from Ground (i.e. patch has to be avoided in these cases).

Information to indicate all actions of operational significance taken by on-board software should be available in telemetry, along with any other significant instrument parameter.

A1.6.2 SW Implementation Requirements

The on-board software shall be developed using an high level language (‘C’ or ‘ADA’ are recommended).

Instrument on-board SW shall be put under configuration control. Executable code is a deliverable item.
All relevant files shall start with a heading prologue, containing at least the following information:

- File Name
- Project Name
- P/L identifier
- Company Name

- Author
- Current Version
- Included functions
- Edit history (including: date of change, affected version, reason for change (specifying related document/minutes/SoftwareProblemReport/etc), author)
- Abstract (i.e. a short description of the supplied functionality)

In-flight maintenance directly supported by the ExoMars Orbiter MOC furthermore requires that functionally distinct areas of memory shall be assigned to:

- program code
- fixed constants
- variable parameters

A1.6.3 Instrument Autonomy and FDIR

A1.6.3.1 General

In case forbidden mode transitions are identified, then the Instrument itself should implement internal safety logic to prevent inadvertent commanding of such mode transitions.

The Instrument shall respond to an “are you alive” ping from on-board computer in order to check the end-to-end data connection.

The Instrument should provide the capability to perform self checks on command and at power on.

Entering a test mode should not require (or imply) disabling of fault management functions.

Anomaly Instrument reports, if any, shall be generated only once per anomaly occurrence even if the anomaly is detected during successive cycles.

It is recommended that all parameters used for Instrument autonomous operations are updateable by dedicated telecommand and available in Instrument HK telemetry.

If Instruments want to make use of automated monitoring capabilities provided by the on board data handling system, they should have Telemetry and Command structures defined in the Spacecraft Database and comply with the following standard:

- ECSS-E-70-41A, Telemetry and Telecommanding Packet Utilisation, 30 January 2003

A1.6.3.2 Instrument FDIR at Equipment Level

The Instrument should provide autonomous faults detection and recovery capabilities for all failures which can be managed internally at unit/equipment level by the HW/SW.

It is recommended that the management of anomalies within an instrument is handled in a hierarchical manner such that resolution is sought on the lowest level possible.

Anomalies and autonomous actions taken to recover from them should be reported in event packets.

All the mode transitions and reason of them should be reported in instrument HK Telemetry

It should be possible to reconstruct from HK telemetry the conditions leading to the generation of an event.

It should be possible for the ground to enable/disable each individual Instrument fault management function.

All parameters used for autonomous fault management (e.g. thresholds for limit checks), should be updateable by telecommand and available in telemetry.

It should be possible to enable / disable autonomous entry, and to force manual entry into Survival Mode (or safe) by telecommand. Autonomous entry to Survival (or Safe) mode shall be enabled by default at power on.

A1.6.3.3 Instrument FDIR at System Level

The PI shall define (if any) the set of events to be monitored by the CTU autonomously, together with the associated reactions. Both events and reactions shall be specified and clearly stated in the E-ICD.

The PI shall define (if any) the set of events to be monitored by the Mission Operations Centre on ground. Both events and associated reactions shall be specified and clearly stated in the E-ICD.

In case of recovery actions demanded to system level FDIR (managed by on-board computer), the Instrument design shall cope with a latency time of intervention in the order of several seconds.

A1.7 Electromagnetic Compatibility Requirements

A1.7.1 EMC Design Requirements

A1.7.1.1 Grounding / isolation Concept

A1.7.1.1.1 General philosophy

The ExoMars grounding concept shall be Distributed Single Point Grounding (DSPG) system. Each power distribution is galvanically insulated from the others.

The principle is to realise a single point ground (SPG) for each independent power network and also to provide isolation between those networks. For the power this isolation will be galvanic, for signals receiver this isolation will be high impedance.

The primary power bus is grounded at one location, to the spacecraft structure.

Each primary 0V (return path) is referenced to the Spacecraft ground reference by a single point, placed inside the PDU. This grounded point is designed to withstand a fault current equal to battery short circuit.

DC power supply shall be decoupled by a DC/DC converter. No return current through structure is allowed.

A1.7.1.1.2 Primary power isolation

Except for the single point ground, there shall be an isolation of ≥1MΩ in parallel with a stray capacitance of ≤ 50nF throughout the whole satellite for each

- Primary power hot line and structure
- Primary power return line and structure

50nF requirement applies directly at the primary power inputs.

A1.7.1.1.3 Primary power mutual isolation

There shall be an isolation of ≥1MΩ throughout the whole satellite for each

- The Primary power return and redundant primary power return.

A1.7.1.1.4 Primary power insulation to secondary

For the following lines the isolation shall be ≥ 1 MΩ

- Primary power hot line and secondary power hot and return lines
- Primary power return line and secondary power hot and return lines

It is recommended to use static shields between primary and secondary windings of transformers.

A1.7.1.1.5 Secondary Power Reference Point

Secondary power shall be referenced to structure only once within each unit / experiment

A1.7.1.1.6 Secondary Power Isolation

Except for the single point ground, there shall be an isolation of ≥ 1 MΩ in parallel with a stray capacitance of ≤ 50nF throughout the whole secondary power network between each

- Secondary power hot line and structure
- Secondary power return line and structure
- Secondary power return and redundant secondary power return.

The requirement for maximum capacitance applies directly at the secondary power outputs.

This requirement shall be verified before connecting the internal reference ground (unit internal 0V) to the single point ground.

In the case that several units are supplied from the same DC/DC converter secondary power output the distribution shall be a starpoint system.

Each unit shall provide a grounding diagram.

A1.7.1.2 Bonding Concept

A1.7.1.2.1 General Bonding Concept

Bonding connections are required to ensure that all the ExoMars modules are free from such hazards as exposure to electrical shock and static discharge, and to provide fault clearing paths and the suppression of electromagnetic interference.

A1.7.1.2.2 Bonding Unit requirements

Unit Case - The equipment chassis material shall be electrically conductive. All part of the unit structure shall be electrically connected. The DC resistance between two points of a metal case shall be less than 2.5 mΩ (tested at 1 A). This includes the resistance between any point of the case and any point of a cover or connector or bonding point.

Bonding Point - The electronic equipment boxes shall be fitted with an attachment point for electrical bonding purpose (low impedance path).That attachment point is called Reference Bonding Point, and it will consists of a bonding stud or, alternatively, a bonding hole.

The conductive surface (of the reference bonding point) shall be as minimum 20mm2 (1cm2 is recommended).

The reference bonding point shall be easily accessible when the unit is integrated on the spacecraft and shall be clearly marked on the mechanical interface drawings.

A bonding strap will connect the reference unit bonding point to the relative Spacecraft/Module/Subsystem structure (following the rules described in paragraph. A1.7.1.2.3).

The reference bonding point shall be designed taking in to account the fault current of the unit. The fault current is defined in paragraph.A1.7.1.2.3.

To maintain the shielding integrity of the basic shield enclosure, apertures shall be minimised in quantity and size. Unit opening shall be fitted with special EMI screens (e.g. honeycomb or mesh cover).

A1.7.1.2.3 Bonding Strap

Requirements for bond strap:

- Any bonding strap shall be as short as possible and should not exceed a length–to–width ratio of 5, in order to limit approximately the impedance to 0.1 Ohm at 1 MHz.
- Each bond shall have a resistance < 2.5 mΩ (ECSS-E-20A – Req. 6.2.3-c).

A1.7.1.3 Signal Classes

Power and signal lines shall be grouped into the following EMC classes:

- Class 1: Power (Twisted Pairs)
- Class 2: Command (with voltage larger than 6V)
- Class 3: Analogue Signals/ Command and Bi-Level (not included in Class 2) (Twisted Shielded Pair)
- Class 4: RF Signals (Coax)
- Class 5: Pyrotechnic wiring (Twisted Shielded Pair)

All wires shall be labelled according to their EMC classifications.

A1.7.1.4 Harness, Connectors, and Shielding

A1.7.1.4.1 Harness

A1.7.1.4.1.1 General Requirements

Harness bundles shall contain wires of the same EMC classification

Wiring bundles of different EMC classifications shall be physically separated from each other. A minimum separation distance of 5 cm, or equivalent shielding, shall be maintained between different categories.

NOTE: For common run length less than 0.5 meter, a deviation to the separation requirement between less sensitive classes is allowed.

A1.7.1.4.2 Shielding

- As general rule only class 3, 4 and 5 signals should be shielded in order to guarantee the signals integrity and to reduce EMI, saving in any case weight.

A1.7.1.5 Bonding of Thermal Control Items

The unit thermal control (if applicable) shall be compliant with the requirement reported here after.

Material used as blanketing (i.e. MLI) > 1 cm2 shall be metallised or conductively coated on at least one side of each blanket layer.

All external and internal metallic layers of a thermal blanket (e.g. multi-layer insulation) shall be grounded to the structure with at least 2 bonding strap directly to ground (no daisy chain configuration). The DC resistance between one of these points and the structural reference shall be less than 100mOhm (tested at 1 A).

Any point on a blanket shall be within 1 m of a bonding strap.

Adjacent blankets greater than 100 cm² in area shall be separately grounded to structure.

Each metallised foil shall be electrically connected to the grounding point of the MLI piece. The DC resistance between this point and any point belonging to a metallised face of any foil shall be less than 10 Ohm (test at 100mA).

NOTE: Provision of only one grounding point for small pieces shall be subject to the Prime Contractor approval.

Each blanket ground point shall be connected to the nearest practical point on the structure, with a minimum length grounding wire. The maximum length shall be determined taking into account the limit of 100mΩ (including the contribution of fixation items).

Single layer blanketing external to the spacecraft, e.g., thermal tape applied to cabling, shall be electrically conductive at least on one side (outer side is the preferred).

Moreover, each metallised face of a thermal shield, internal as well as external (e.g. Kapton aluminized in both faces), shall be connected to the structure even if the thermal shield is made by only one foil. Bonding requirements are as for MLI.

A1.7.2 Frequency Plan

A System frequency plan shall be maintained as part of the EMC programme. Each unit developer shall contribute providing, for the part of their competence, unit/subsystem frequency plan.

A1.7.3 EMC Performance Requirements

A1.7.3.1 Conducted Emissions

A1.7.3.1.1 Conducted Emissions – Frequency Domain

Conducted narrow band (NB) current emissions in the frequency range 30 Hz - 50 MHz appearing on the unit positive and return primary power lines (differential mode) shall be within the limits of Figure A1 9.

Conducted Common Mode current emissions in the frequency range 10kHz - 50 MHz shall be within the limits of Figure A1 9.

This requirement shall be applied to each power bus (regulated main bus, unregulated bus and external secondary bus)

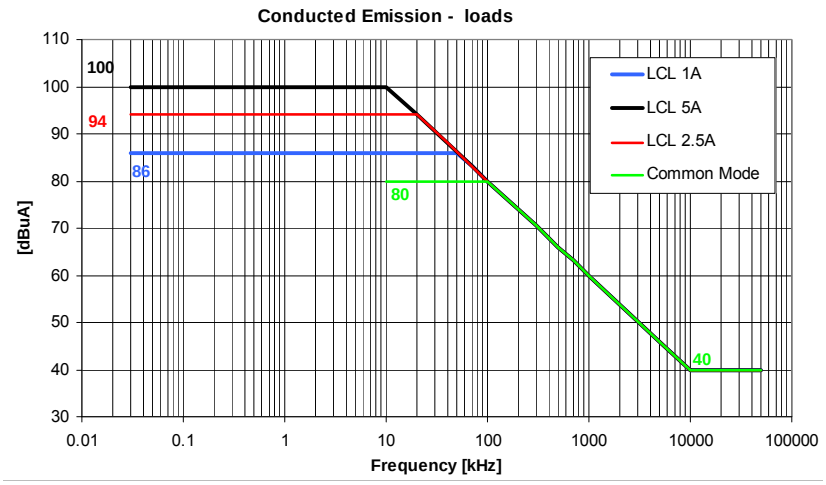

Figure A1 9 Unit Conducted Emission

A1.7.3.1.2 Conducted Emissions – Ripple and Spike

The unit voltage emission between the individual power leads shall be less than:

Regulated Bus	Unregulated Bus
• 560mV$_{PP}$ for spikes • 140 mV$_{PP}$ for ripple	• ±3V$_P$ for spikes • ±250mV$_P$ for ripple

The peak to peak value (including ripple and spikes) shall be measured with an oscilloscope, capable to detect peak to peak value, with an adequate bandwidth (≥ 50 MHz).

The spike shall be defined as transitory high frequency oscillations with duration lower than 10µs and without a repetitive period.

V$_P$ means peak voltage; V$_{PP}$ means peak-to-peak voltage.

A1.7.3.1.3 Conducted Emissions – Time Domain

The peak to peak input current ripple (including spikes) of any PDU load shall be less than 60 mA$_{pp}$, normalized to an input nominal current of 1 A. For loads with higher nominal current, the limit shall be relaxed by √I(A), where I(A) is the Load nominal current.

The measurement shall be performed with a bandwidth higher ≥ 50 MHz.

The spike shall be defined as transitory high frequency oscillations with duration lower than 10µs and without a repetitive period.

A1.7.3.1.4 Conducted Emissions – Signal Lines

The signals (classified in Class 4) shall perform the conducted emission, common mode current, in frequency domain (10kHz÷50MHz), for information only.

The current probe shall measure the common mode considering the couple of wire. The measure shall not be performed on the shield cable.

The RF signals (coaxial cables) shall not perform this test.

A1.7.3.2 Conducted Susceptibility

A1.7.3.2.1 Conducted Susceptibility – Frequency Domain

Primary power bus powered units shall not exhibit any failures, malfunctions or unintended responses when sine wave voltages defined of 1 V_{RMS} in the frequency range 30 Hz - 50 MHz are injected into the power bus inputs.

Within the frequency range 30 Hz - 50 kHz the injected current shall be limited to 1 Arms and from 50 kHz to 50 MHz the injected power of a 50 Ohm source shall be calibrated to 1 W on a 50 Ohm load.

From 50kHz to 50MHz the sine wave shall be 30% AM modulated by 1kHz square wave.

N.B. the EMC test report shall report the frequencies when eventually the 1 A limitation is active.

A1.7.3.2.2 Conducted Susceptibility – Transient Common Mode

The unit under test shall not exhibit any failures, malfunctions or unintended responses when the following disturbing signal is superimposed on its input power line (Regulated and Unregulated power lines):

- Amplitude: E=28V;
- Duration: $\tau \geq 5\mu s$;
- Rise Time: $t_r < 100ns$;
- Both polarities shall be tested.

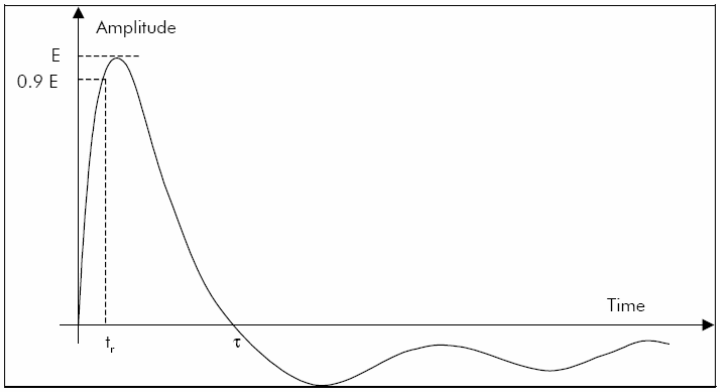

Figure A1 10 Rise Time and Time Duration Definitions

The rise time takes for the injected voltage to change from 10% to 90% of nominal bus voltage (for example for 28V bus, the lower level is about 2.5÷3V while the higher level is about 25.5÷26V).

A1.7.3.2.3 Conducted Susceptibility – Transient Differential Mode

The unit shall not exhibit any failures, malfunctions or unintended responses when transient voltages with the following characteristics (Figure A1 11) are superimposed on the primary power bus inputs. The injection shall be parallel between positive and negative lines, injecting both positive and negative going pulses (one at a time):

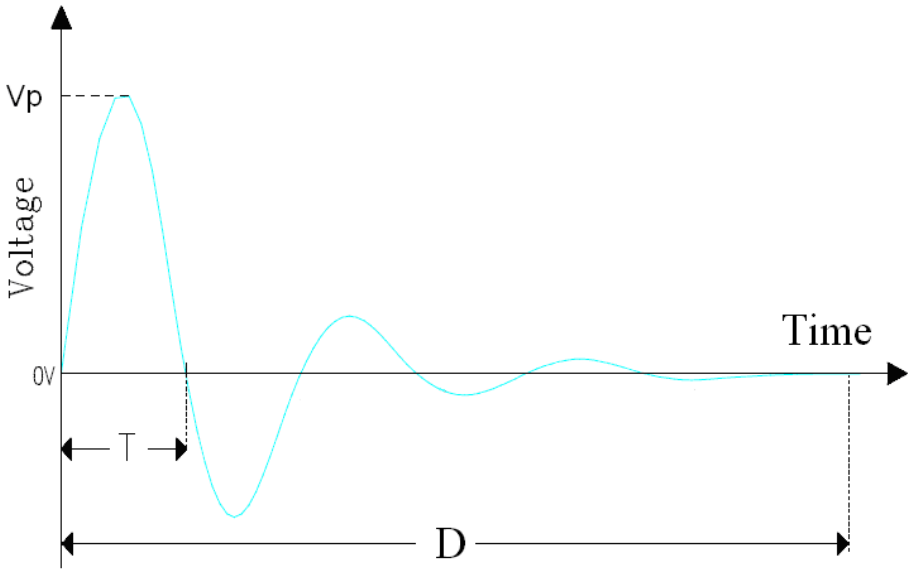

Figure A1 11 Conducted Susceptibility on Power Lines – Transient

Transient – REGULATED BUS (28V MAIN BUS)

1) transient voltages Vp=± 3V
2) duration D=15 ms
3) repetition frequency 10 Hz
4) Two different value for T (T is defined in Figure A1 11) has to be considered:
   - T≤10µsec and
   - 0.5ms≤ T≤1ms

Transient – UNREGULATED BUS

1) transient voltages Vp= ±6V
2) duration D=15 ms
3) repetition frequency 5 Hz
4) Two different value for T (T is defined in Figure A1 11) has to be considered:
   - T≤10µsec and
   - 0.5ms≤ T≤1ms

NOTE: In case of not compliant a waiver shall be subjected to the Prime. The waiver shall give the results up to the level of tolerance with step of 0.5V.

A1.7.3.3 Radiated Emissions

A1.7.3.3.1 Radiated Emissions E-Field – General Requirement

ExoMars Units shall not radiate electric fields, narrow band, in the frequency range 10kHz - 20GHz in excess of the limit reported in Figure A1 12, measured at 1m distance.

The unit shall be tested considering its maximum emission. The different operative phase (and relative configurations) shall be considered.

The measurement above 1GHz may be omitted if the 10th harmonic of the maximum operative frequency is <1GHz and it is lower than limit reported in Figure A1 12.

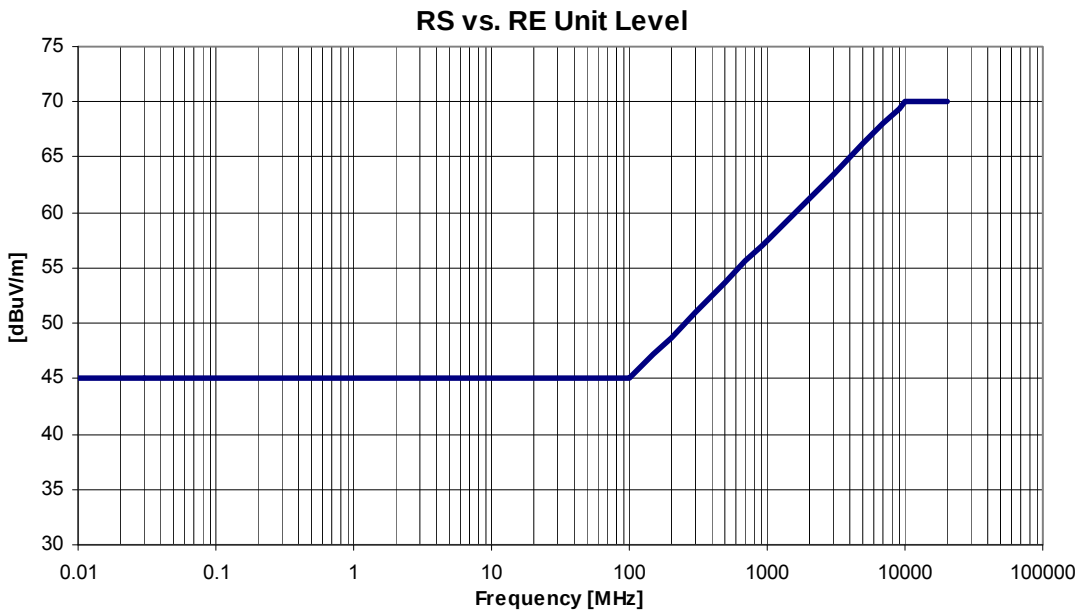

Figure A1 12 Conducted Susceptibility on Power Lines – Transient

A1.7.3.3.2 Radiated Emissions E-Field – Launcher Notches

ExoMars Units, which are switched on during the launch phase, shall not radiate electric fields, narrow band, in excess of the limit reported in Table A1-6, measured at 1m distance.

Frequency Band [MHz]	Level [dBµV/m]	Note
410÷430	35	Atlas
1570÷1640	60	Proton
2720÷2730	56	Proton
5660÷5760	60	Atlas & Proton

Table A1-6 –Launcher Notches Limits at Unit Level

A1.7.3.3.3 Radiated Emissions E-Field – TT&C Notches

ExoMars units shall not radiate electric fields, narrow band, in excess of the limits reported in Table A1-7, measured at 1m distance from the relevant antennas of the Orbiter.

Frequency Band [MHz]	Level [dBµV/m]	Note
Band UHF – 390÷450	10	Uplink – Applicable during data relay phase in parallel to science acquisition
Band X – 7100÷7212	10	Uplink - Applicable during all mission phases

Table A1-7 –TT&C & System Notches at Unit Level

A1.7.3.3.4 Radiated Emissions H-Field

The Exomars unit shall not radiate AC magnetic fields, narrow band, in the frequency range 30 Hz - 50 kHz in excess of the limits shown in Figure A1 13, measured at 7 cm distance.

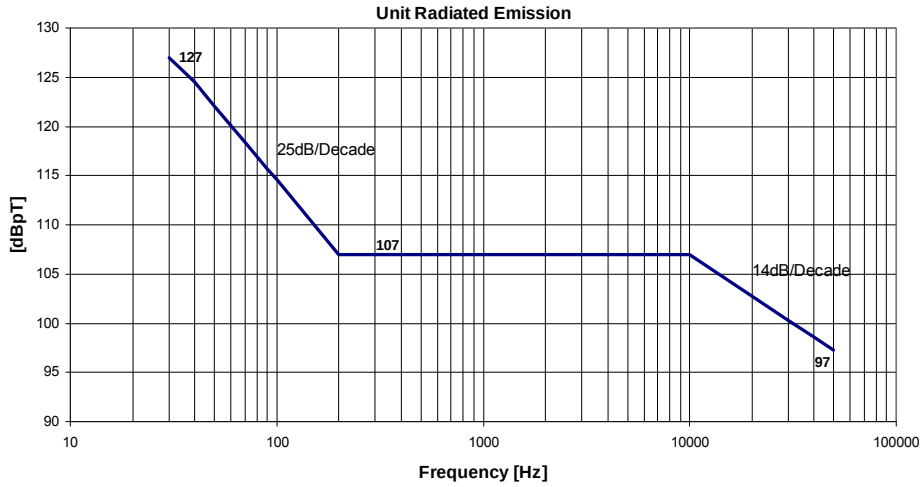

Figure A1 13 Unit Radiated Emission – H-Field

A1.7.3.4 Radiated Susceptibility

A1.7.3.4.1 Radiated Susceptibility E-Field – General Requirement

ExoMars units shall not show any damage, malfunction or deviation from the specified performance, when they are exposed to the E-field narrowband susceptibility limit of 132dBµV/m (4VRMS/m) in the frequency range 10kHz÷20GHz.

The injected sinewave signal shall be 30% amplitude modulated by 1kHz square-wave. Up to 30MHz only vertically polarized fields shall be considered. Above 30MHz, the requirement shall

be met for both horizontally and vertically polarized wave. The test shall be performed following the MIL.STD.461E (RS103) or MIL.STD.462D (RS103).

A1.7.3.4.2 Radiated Susceptibility E-Field – Launcher Notches

ExoMars units shall not show any damage, malfunction or deviation from the specified performance in launch configuration, when they are exposed to the electrical fields, narrowband, shown in Table A1-8.

Frequency Band [MHz]	Level [dBμV/m]	Note
2206÷2216	150	Atlas
5760÷5770	154	Atlas

Table A1-8 –Details of Susceptibility Limits

Furthermore, the units which are switched on during the launch phase shall avoid to use the following frequencies (reserved to launch vehicle):

- 410-430MHz
- 5660-5720MHz

The injected sinewave signal shall be 30% amplitude modulated by 1kHz square-wave. Up to 30MHz only vertically polarized fields shall be considered. Above 30MHz, the requirement shall be met for both horizontally and vertically polarized wave. The test shall be performed following the MIL.STD.461E (RS103) or MIL.STD.462D (RS103).

Note: the limits reported in ATLAS User Manual (the worst case) have been reduced of 7dB considering a shielding effectiveness of the structure.

A1.7.3.4.3 Radiated Susceptibility E-Field – TT&C Notches

ExoMars units shall not show any damage, malfunction or deviation from the specified performance, when they are exposed to the electrical fields, narrowband, shown in Table A1-9 (Telecommunication Notches).

Frequency Band [MHz]		**Level [dBμV/m]**	**Note**
UHF Band	390÷450	148	Direct Downlink – for DM & RM units
X Band	8400÷8450	156	Direct Down link.
Ka	35750±250 MHz	126	Radar Doppler for DM units

Table A1-9 – TT&C Frequency Range and Susceptibility Limits

The Orbiter units shall verify the Band X notch. The DM units shall verify this notch considering the typical operative condition during the cruise phase.

The radar Doppler notch shall be verified by DM units (it is not applicable to Orbiter units). The units shall be tested considering the EDL/Mars operative condition (stand-by, operative, etc…).

The UHF notch shall be verified by Orbiter Module units and by DM units. The DM units shall be tested with their typical operative condition.

The injected sinewave signal shall be 30% amplitude modulated by 1kHz square-wave. Up to 30MHz only vertically polarized fields shall be considered. Above 30MHz, the requirement shall be met for both horizontally and vertically polarized wave. The test shall be performed following the MIL.STD.461E (RS103) or MIL.STD.462D (RS103).

A1.7.3.4.4 Radiated Susceptibility H-Field

The unit shall not show any damage, malfunction or deviation from the specified performance when irradiated with sine-wave H-field strength as shown in Figure A1 14 in the frequency range 30Hz÷50kHz.

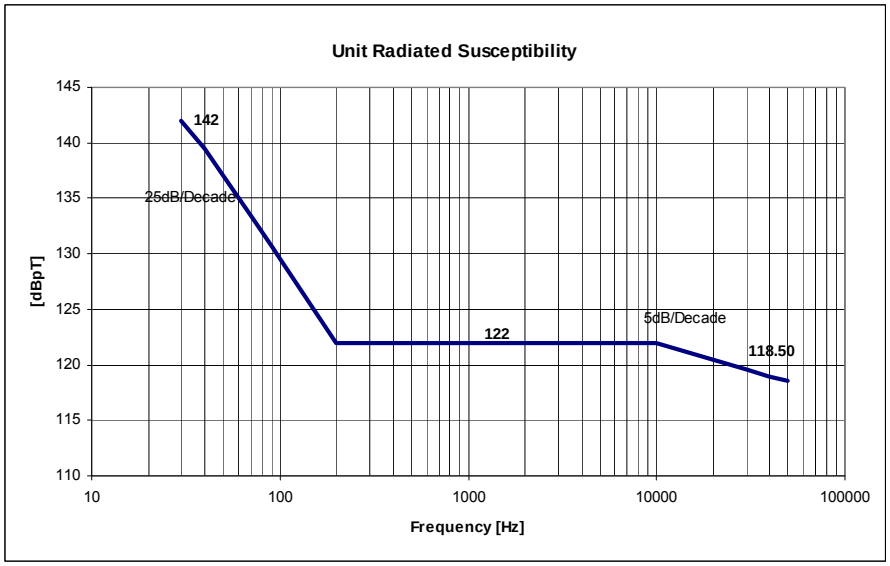

Figure A1 14 Radiated Susceptibility Limit

A1.7.3.5 Electrostatic Discharge

A1.7.3.5.1 Electrostatic Discharge – Condcted ESD

Spacecraft units shall operate with nominal performance when exposed to conducted electrostatic discharge with the following characteristics:

1) magnitude/energy	> 10kV / 10mJ
2) Peak Current	50A Typical
3) rise time (10% - 90%)	< 10nsec
4) duration (half amplitude)	100nsec
5) repetition rate	10Hz

6) duration	> 3min

A1.7.3.5.2 Electrostatic Discharge – Radiated ESD

Spacecraft units shall operate with nominal performance when exposed to a radiated electrostatic discharge with the following characteristics:

1) magnitude	> 10kV
2) Peak Current	50A Typical
3) energy	15mJ
4) distance between source and unit	30cm
5) repetition rate	10Hz
6) duration	> 3min

A1.7.3.6 Susceptibility to Micro Cut Off

Units which are operative during launch phase shall sustain, without damaging, in advertent power bus on/off transitions.

Test shall be performed as following:

- Off pulse (voltage cut off to 0V) to be applied at unit input 10 times
- Off pulse time duration: 50µs.

A1.7.3.7 Corona Effect

Equipments using voltage above 100V shall be tested to evaluate possible corona effect.

The verification shall be performed during the Thermal Vacuum Tests.

A1.8 Environmental Requirements

A1.8.1 Cleanliness and Instrument Handling

A1.8.1.1 Introduction

In any optical system, cleanliness is a key factor in system performances. Systems operating in the ultraviolet, visible and IR bands are sensitive to molecular and particulate contamination.

During manufacturing, integration and tests phases, and in orbit, contaminants are deposited on optical surfaces and could degrade the performances of the system.

The outlined conservative approach to cleanliness sets cleanliness goals that approach the state-of the art, in order to minimise contamination on the external payload surfaces and to insure a keeping of the cleanliness levels of each instruments.

The least risky and most cost-effective way to achieve low levels of contamination is to think clean and design cleanliness into both the payload and its fabrication processes thereby eliminating many sources of uncertainly and risk

A1.8.1.2 C&CC Management - PI Responsability

To assure the suitable cleanliness and contamination control at instrument level, payload teams are required to assign a person to act as a technical and administrative liaison for all cleanliness issues.

Each PI is responsible for the procurement of the instruments, for all cleanliness activities related to these instruments until their delivery for payload integration. They are also responsible for providing to the Prime/Agency the following cleanliness data on the instruments:

- Specifications on the design, interface requirements, operation of contamination control devices which are accessible or required to be used during ground operations (e.g: covers, interface hardware for purging...).
- Packaging and storage requirements for the instruments.
- Specification of permissible (if any) instrument cleaning operations and detailed procedures on how to perform them.
- End-item contamination records for the instruments which are to include certification of molecular and particulate cleanliness levels achieved prior to delivery for spacecraft integration.
- Specification of all instrument cleanliness requirements for integration, launch (TBD).
- Identification of contamination sensitive surfaces which are accessible at the spacecraft level.
- Specification of amount and type of permissible contaminant deposition by location at beginning and end-of-life for external instrument surfaces.

The PI shall submit to Prime/Agency a “Contamination Control Plan” to give evidence of procedures and methods implemented to fulfil cleanliness and contamination control requirements.

A1.8.1.3 Cleanliness Requirements

Cleanliness is required to minimize contamination impacts (particulate and molecular deposits) and degradation of the overall spacecraft performance.

Particulate, molecular (and microbiological) contamination is directly related to the cleanliness level of the environment and to personnel/operations during integration, testing, handling, storage and transportation. Then, adequate control is necessary to meet the Contamination Control Requirements as well.

Instrument teams must be aware that peculiar clean room requirements and bioburden reduction treatment may be implemented to meet the Planetary Protection requirements (see Chapter A1.8.5) therefore the interaction between the two disciplines must be taken into account.

A1.8.1.3.1 Contamination Sensitivity

Sensitive items and specific constraints shall be identified by Payload Investigators, and they shall provide following information:

1. Location: where the sensitive item is contained
2. Subsystem including the sensitive item
3. Type of sensitivity (molecular, particulate, both)
4. Max allowable level of contamination before unacceptable degradation of performances (EOL needs)
5. Operating temperature
6. Reference: As an example, the payload cleanliness & contamination plan
7. Monitoring: How the contamination is controlled during assembly
8. Protection
9. Purging needs

→ A cleanliness level of **500A** (TBC) is required for Payload external general surfaces (not sensitive) at Instrument delivery to the Agency.

 Instruments Investigator must design to withstand an outgassing rate until EoM in the order of **1E-13 g/cm^2/s** (TBC) and have to guarantee an outgassing rate of their H/W until EoM in the order of **1E-14 g/cm^2/s** (TBC).

 Instrument Investigator must design to withstand a total contamination deposition due to propulsion systems (NTO-hydrazine RCS thrusters and Main Engine) in the order of **1E-03 g/cm^2** (TBC).

A1.8.1.3.2 Cleanliness Assessment

Spacecraft cleanliness analysis is an iterative process of estimating contaminant levels due to ground integration and tests phases.

Instrument Teams will be responsible for determining the effects of molecular and particulate contamination on their equipment.

In order to assess the best way to protect the Instruments, it is useful to provide the guidelines to compute the Contamination budgets for each instrument:

Three typical cases can be preliminarily taken into account to allow instrument teams choosing the needed configuration, based on the sensitivity of each payload and the required cleanliness level:

- instrument with purging and cover
- instrument without purging and with cover

- instrument without purging and cover

To establish the configuration needed by each payload, the following assumptions shall be taken into account:

a. 1 week in class ISO8 leads 2.E-7 g/cm^2 (ECSS-Q-70-01)

b. with covers on, the instrument external molecular environment impact on the internal parts of the instrument is decreased by a factor 100 ==> 1 week in class ISO8 leads 2.10-9 g/cm^2.

c. the cover provide a 100% efficiency against particulate contamination.

d. the purging and the covers provide a 100% efficiency against molecular and particulate contamination

e. Clean Room class ISO8 leads 225 ppm/24 hrs (ISO 14644).

f. a duration of 5 days (TBC) without purging and without cover can be preliminarily considered under fairing before launch. A class ISO8 will be guaranteed during the launch campaign.

A1.8.1.3.3 Molecular monitoring

→ Molecular monitoring shall be performed by Instrument Teams before the delivery of the payload to the Agency, and adequate certification shall be produced.

Note:

It is recommended to perform molecular monitoring by IR spectroscopy as per ECSS-Q-70-05A, with direct method using exposed IR transparent witness plates. Molecular cleanliness monitoring of the sensitive surfaces shall be performed by exposing as near as possible to these surfaces, molecular witness samples to control molecular levels. These samples will be analysed first with the FTIR spectrometer according to the ECSS-Q-70-05A in order to quantify the potential contaminants and the contamination level, and secondly in the spectral bands of the instruments in order to quantify the transmittance losses due to these contaminants.

In particular NVR analysis on ZnSe/CaF_2 witnesses are recommended.

A1.8.1.3.4 Particulate monitoring

→ Particles monitoring shall be performed by Instrument Teams before the delivery of the payload to the Agency, and adequate certification shall be produced

Particulate monitoring shall be performed on Instrument surfaces by PFO meter analyses and Tape Lift particles counting.

A1.8.1.3.5 GSE & Test Equipment

Instrument teams shall provide all necessary ground support equipment (see section A1.9).

→ All GSE hardware shall be delivered at the same cleanliness level of the associated payload (unless otherwise specified). Moreover, this hardware shall not impair the cleanliness level of the controlled environment where it will be placed and of the Flight Hardware in proximity to it. Adequate documentation to prove compliance to this requirement is requested.

→ Test Equipments shall be designed so as to avoid degradation of the cleanliness level of the unit under test.

→ Eventual Test Equipments used inside thermal vacuum chamber shall be designed using low-outgassing materials. (1% TML and 0.1% CVCM).

A1.8.1.3.6 Purging

→ The PI is responsible for the identification of Payload elements needing purging. For each of them, the PI shall specify:

1. Form of purging (continuous or periodic);
2. Duration of periodic purging;
3. Phases in which purging is mandatory;
4. Individual purge rates;
5. Purity grade of purging fluid;
6. Exact position of purging I/F (to be agreed with ESA Project Office and Prime Contractor)

Moreover, the Instrument design shall guarantee accessibility to purging I/F after integration on spacecraft in case purging is needed until launch

A1.8.1.4 Design Requirements

A1.8.1.4.1 Designing for cleanliness

Design plays a major role in overall cleanliness control as proper use of contamination barriers, low-outgassing materials, and placement of contamination sensitive surfaces relative to the rest of the spacecraft can reduce ground and on-orbit contamination levels.

Key cleanliness design elements that shall be considered in Instruments design are discussed below.

A1.8.1.4.1.1 Payload configuration

Hardware, whenever possible, should be configured so as to minimise view factors between contaminating generating surfaces and contamination sensitive surfaces. This greatly reduces the risk of vacuum outgassing contamination during ground testing and on-orbit.

Each Instrument Team must be aware that a combination of process controls, materials outgassing testing, space conditioning and design qualification testing could be requested to assure that outgassing products do not become problems for the instruments. Therefore, the Instruments configuration shall be adapted (by the Prime in collaboration with science teams) in order to avoid/minimize cross-contamination among the different instruments.

Thus, the following sections have to be interpreted by each instrument team also from the a.m. point of view, and not only as guidelines to prevent the contamination on their own equipment.

A1.8.1.4.1.2 Contamination barriers

Use of temporary or permanent covers or other contamination barriers is encouraged to reduce ground, launch and on-orbit particulate and molecular contamination. Whether temporary or permanent, these barriers are to be constructed of materials which do not produce significant particulate and molecular contamination.

A skirt, bag or other type of barrier can be placed around either the test equipment or the unit under the test to accomplish cleanliness requirements during specific tests at system level (e.g.: vibration, acoustic, etc.). Instrument teams are requested to provide indication and procedures to protect their own units / test equipments.

A1.8.1.4.1.3 Material Selection

The selected materials shall produce low particulate and molecular contaminants. It is preferable to place materials so as to avoid, as much as possible, direct view factors to sensitive surfaces (both pertaining to the Orbiter and to the other Instruments). Potential particulate generating materials include certain paints, organic films, and Velcro

The baseline for molecular contaminants is that materials shall have less than 1% TML and 0.1% CVCM when tested per ECSS-ST-Q-70-01C.

However, several studies have concluded that use of such materials will not guarantee the desired cleanliness levels in critical applications. This is due to several factors. First, the test conditions are not always representative of spacecraft conditions and cannot be reliably extrapolated to spacecraft conditions due to the limited data collected during the test. Second, too often tests results from one batch of material are extended to all other batches. Comparative testing of different batches of materials has found great differences in the test results. Third, significant differences in test results have occurred among test labs conducting tests on identical samples.

In general, preference should be given to materials with very low TML and CVCM values. Tests on materials used in critical applications and having direct view factors to sensitive surfaces could be performed on a batch basis and preferably via ESTEC VBQC test-like method.

A bake-out could be necessary at payload level on organic materials located near sensitive surfaces and identified as critical.

Bake-out will be mandatory:

- When RML or CVCM are out of requirement

Payload Investigators shall provide description of non-metallic materials for system level verification of C&CC requirements. In particular, the following information shall be provided:

- **Commercial identification**
  Trade name and number, correct and standard designation

If no trade name exists, then the manufacturer's name plus number are entered.

- **Composition**
  Chemical composition of the material
- **Use and location**
  Indicates in what subsystems, box or item the material is used and whether it acts as a structural element, thermal control, electrical insulation etc. as relevant.
- **Cure**
  Description of thermal cure parameters, if any
- **Temperature**
  Nominal operating temperature [ºC] - average and maximum
- **Size**
  Surface area [cm2] or mass [g] and the indication if the identified non-metallic material is sealed or not
- **Thermal vacuum stability (TVS) values** from identified reference:
  - TML
  - RML
  - CVCM
- **Condensable outgassing rates**

Condensable outgassing rates from dynamic outgassing tests such as ESA VBQC-test or ASTM E1559 shall be provided (at material/item operative temperatures).

As a minimum it shall be done if the used material:

- covers an area larger than 1000 cm^2 or,
- is in the field of view of a contamination sensitive surface.

The control of material outgassing shall be performed by:

- initial screening of materials for their outgassing properties (TML, RML, CVCM) with acceptance criteria of RML < 1% and CVCM < 0.1% (as defined in ECSS-Q-70-02A, Thermal Vacuum Outgassing Test for the Screening of Space Materials – see Note)
- review of declared materials and processes list
- In general, adoption of silicone-free materials, every time viable alternatives exist
- selection of appropriate countermeasures such as vacuum bake-out or other suitable treatments (e.g. metallic coatings)
- Implementation of design solutions able to avoid/minimize the out-offgassing contribution of materials (e.g. minimization of exposed areas of materials with high OGR)

A1.8.1.4.1.4 Particulate Generation

Instruments Mechanisms and hardware deployments shall not generate particulate debris or molecular contaminants that will adversely impact adjacent external surfaces or other external contamination sensitive surfaces.

The control of external particulate contamination shall be performed by:

- selection of non-flaky, non-dusty, non-shatterable materials,
- identification of moving parts or mechanisms and protection from the release of particles
- observing the specified cleanliness requirements

A1.8.1.4.1.5 Cleanability

Equipment and structural elements of Instruments shall be designed for cleanability.

Instruments design shall make provisions for accessibility for cleaning. Instruments design shall not contain contaminants traps. Surfaces finishes shall be easily cleanable and not generate particles as a result of cleaning. Porous and textured surfaces shall be avoided as they can trap particles.

All tools and equipment used at Prime premises for cleaning will be non-contaminating. Cleaning procedures shall be compatible with the Instruments hardware. Among cleaning procedures to be employed are :

- hand wiping using wipes low in extractable non-volatile residues and particulate and high purity solvents

- vacuum cleaning

The payload hardware compatibility with these methods shall be notified to Prime. In case of incompatibility, the instrument teams shall identify alternative methods and cleaning procedures.

A1.8.1.4.2 Packaging and Storage

A1.8.1.4.2.1 Packaging

Clean items shall be protected from contamination by preservation, packaging or storage techniques prior to further handling, transportation, assembly and integration. ECSS-Q-70-01A shall be followed.

The payload packaging materials shall not degrade surface cleanliness levels. They shall be at least as clean as the surfaces they protects, they shall meet the ECSS-Q-70-02A outgassing requirements (<1% TML and 0.1% CVCM). In addition to chapter 6.5 in ECSS-Q-70-01A, the condensation of moisture or contaminants on cold surfaces during test or transportation shall be prevented

The packaging cleanliness level shall be verified for all materials contacting external payload surfaces.

Packaging material shall maintain the cleanliness level of the hardware to be protected

Packaging material shall be impermeable in order to protect hardware from contamination caused by penetrating contaminants.

Packaging materials selected for cleaned items shall possess qualities allowing for visual inspection and identification of the cleaned item (i.e. transparent material).

Packaging materials selected for cleaned items shall be resistant to particle sloughing such that it is compatible with the required cleanliness levels.

Packaging materials selected for cleaned items shall possess anti-static properties compatible with the item. Care has to be taken that the antistatic materials does not shed particles or induce molecular contamination

Since there is no ″perfect″ packaging material, adequate precautions shall be taken to protect the payload unit from problems with the material.

A1.8.1.4.2.2 Transport containers

Instruments Containers (for delivery to the Agency/Prime) shall have to provide adequate protection against mechanical shocks. Containers are required to be cleaned before use with a water detergent or other authorised detergent and be free of visible contamination and rough edges that could damage packaging materials and exposed hardware. Additionally, all containers are required to be water-proof.

A1.8.1.4.2.3 Storage

In case Instrument storage at Prime Contractor's premises will be needed, the following conditions will be guaranteed: temperature of 22°C±3°C and relative humidity of 45 to 60%. PI is responsible to confirm compliance with these storage conditions.

A1.8.1.4.3 Launch and Ascent

External Instrument surfaces, shall be compatible with exposure to the following (cumulative) contamination environment during launch campaign, launch and ascent phases:

- Molecular deposition over :
  - Launch preparations: < 2 mg/m2/week (TBC)
  - Launcher outgassing during flight: < 2 mg/m2 (TBC)
  - Launcher thruster plume: < 2 mg/m2 (TBC)

- Particulate contamination:
  - ISO 8 level clean room conditions during launch campaign) and encapsulation under fairing until launch
  - particle fallout 275 ppm/day: (TBC) (as per ECSS-Q-70-01A)

A1.8.2 Pressure Environment, Venting

Prime Contractor Facilities. Thales Alenia Space clean rooms characteristics are the following:

Air Cleanliness:	Cleanroom airborne particulate environment of class ISO8 (100,000) and will be monitored at least weekly with dust counter (e.g. Lasair II) or as differently required.
Temperature:	Cleanroom temperature is maintained at (22±3)°C and monitored continuously.
Pressure:	A positive differential pressure is maintained between the clean room and the outside area. The minimum overpressure is 1.28 mm H_2O (about 12.56 Pa).
Humidity:	Relative humidity is maintained at 40%-50% and is monitored continuously.

Launch Venting

The 4-m PLFs were designed to have a depressurisation rate of no more than 6.20 kPa/s (0.9 psi/s). For the Atlas 400 series (Atlas V 421 class launcher is foreseen), the pressure decay rate will always be less than 2.1÷2.5 kPa/s (0.30÷0.36 psi/s), except for a except for a short period around transonic flight (typically less than 5 seconds) when the decay rate will generally not exceed 5.0÷6.2 kPa/s (0.73÷0.9 psi/s).

Therefore, Instruments structures must be able to withstand these depressurization rates without experiencing a decrease of their performances.

Moreover, suitable venting paths/holes/HEPA filters shall be implemented in the Instrument design in order to follow the typical depressurization rate shown in the figures below:

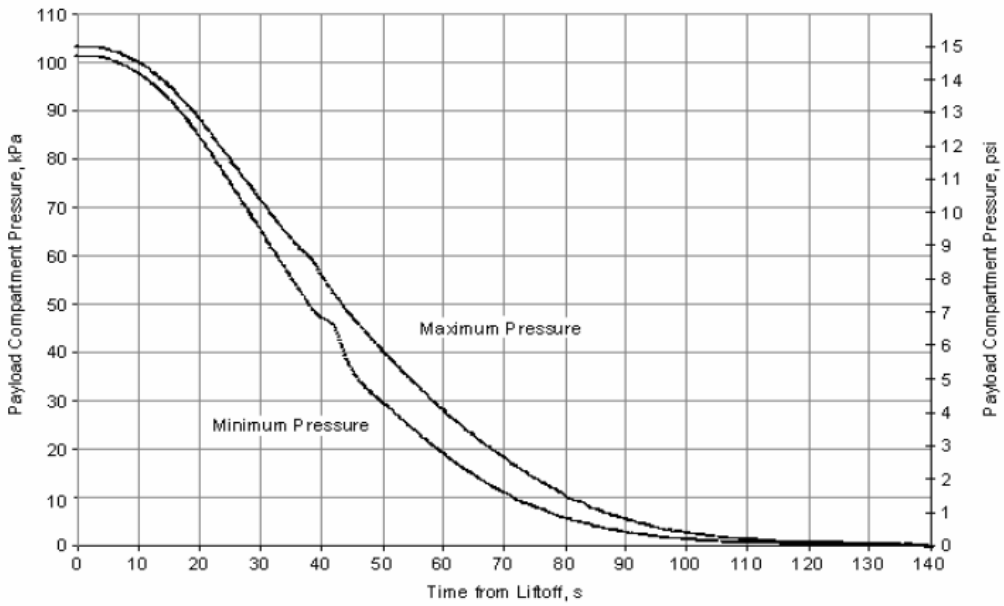

Figure A1 15 Typical Atlas V class launcher Static Pressure Profiles Inside the Payload Fairing (Ref. Atlas V 431)

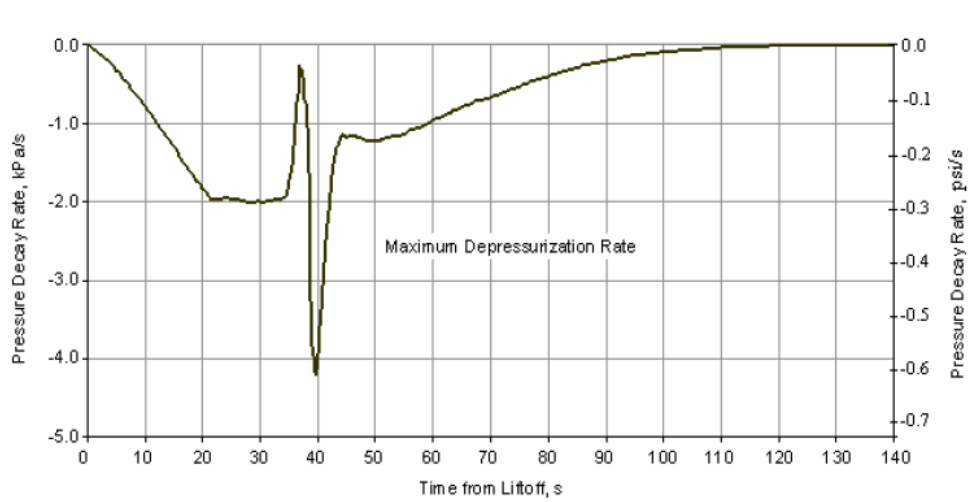

Figure A1 16 Typical Atlas V class launcher Payload Compartment Pressure Decay Rate (Ref. Atlas V 431)

A1.8.3 Radiation

For both the ionising and the non-ionising effects of the spatial **high energy radiations**, beyond the quantitative description of the "external", unperturbed radiations environment (depending in its turn also on the mission profile), it is necessary to avail of the features of the object to be shielded, as well as of those of the elements that, either by necessity or by intentional inclusion, provide an actual shield to the "targets".

Presently, Instrument elements orientation and location inside/outside the Orbiter has been just preliminary outlined. Moreover limited primary information is available about the Payload Instruments actual shielding as related to Orbiter features external to them or to their parts self-shielding.

No special environmental requirements have been identified at this time for all Payload Instrument with the exception of SFTIR declared susceptible to microphonics / microvibrations issues.

By consequence, only an initial kind of evaluation and radiation level assessment is possible, by means of a certain kind of "parametric" approach, and within a certain number of assumptions. To begin with, the most protected Payload Instruments (Silicon) target could be conceived to stay sheltered under at least 2 mm(Al) of Orbiter spacecraft structural items and further 2 mm(Al) provided by the Payload Instruments itself, all over its solid angle under which the radiation is collected. The least one, on the contrary could be deemed at least fully unprotected for, say, one half of the solid angle.

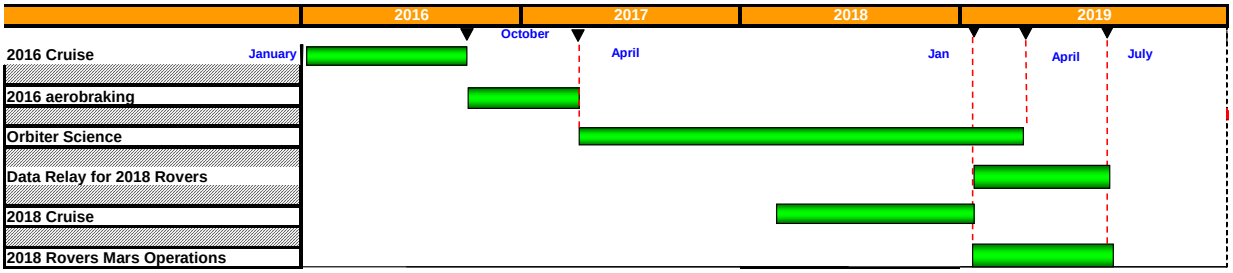

Figure A1 17 ExoMars mission timeline for the 2016 and 2018 missions.

Looking for an estimate of the radiations levels, the previous shielding conditions may be entered into the TID and DDEF curves expressing requirements applicable to Payload Instrument mission. The latter ones should be sought into the updated Environmental Requirements Document of ESA (issue 3 draft 8, chapter 10), whose underpinnings, indeed, are still represented by the old unique mission profile with launch in 2016 and Rover Data Relay phase first (after a waiting orbit period around Mars), with an overall mission duration of 4.79 y. Also the data about radiations descriptors are referred (for the mission complete) to the cited period. On the contrary, – see the sketchy but representative mission timeline in fig. 6.8.3-1 here below – one can estimate the full Orbiter Payload Instruments "science lifetime" in some 3 years and 2 months.

Despite the duration is not the only co-factor for defining the solar protons fluence (at least one must consider the average heliocentric distance, too), a very rough extrapolation by downscaling by some ¾ factor the available data for the old mission frame may be coherent with the rest of approximate assessment.

By this way of proceeding, a full science mission would receive on the most sheltered target (2+2 mm (Al) over the full solid angle):

TID = ¾ × $9.05 \cdot 10^{+3}$ = ~ $6.8 \cdot 10^{+3}$ rad(Si) and

DDEF = ¾ × $2.30 \cdot 10^{+10}$ = ~ $1.7 \cdot 10^{+10}$ 10 MeV-equivalent protons/cm^2;

while, in the case of the less sheltered target (considering the smallest available value of shielding of 0.05 mm(Al)) over ½ of the solid angle, the received values would be:

TID = ½ × ¾ × $5.17 \cdot 10^{+5}$ = ~ $1.9 \cdot 10^{+5}$ rad(Si) and

DDEF = ½ × ¾ × $1.42 \cdot 10^{+12}$ = ~ $5.3 \cdot 10^{+11}$ 10 MeV-equivalent protons/cm^2.

The TID values, expected to fall within the belt between ~ 7 and ~ 190 krad(Si), have then to be multiplied by 2 (as a Radiation Design Margin), like it is for those for TNID expressed as DDEF, expected to lay between ~ 17 and 530 $\cdot 10^{+9}$ 10 MeV-equivalent protons/cm^2, in order to represent minimum radiation hardness levels.

Clearly, such a range is really a broad one; in a second attempt, in order to reduce its width, a simple, average value of aluminium-equivalent shielding thickness and constant over the whole solid angle, may be guessed, from 1 to 2 millimetres. In these cases, respectively, the ranges of the TID and DDEF values are as follows (being unchanged the reduction ¾ factor):

TID = ~ $2.9 \cdot 10^{+4}$ ÷ ~ $1.5 \cdot 10^{+4}$ rad(Si) and

DDEF = ~ $2 \cdot 10^{+11}$ ÷ ~ $1 \cdot 10^{+11}$ 10 MeV-equivalent protons/cm^2.

These TID/DDEF values are provided to PI attention to be used as guidelines in the Instruments design.

In a similar way, aspects relevant to accommodation, position, orientation do affect also the evaluation of the possible problematic effects caused by low energy particles radiations, usually grouped within the definition of **plasma**: it is of full evidence that the larger (in geometry, as well as in duration) the exposition of a Paylaod Instruments surface to plasmas (whichever may their nature and origin be), the more likely is the event or the progress of surface degradation or other induced phenomena. In accordance with requirements in the Environmental Requirements Document of ESA (issue 3 draft 8, chapter 9), proper design and material selection has to be performed.

A1.8.4 Micrometeorite Environment

The aspects related to the evaluation of the micrometeorite environment "impacts" (in this case the used term is precisely usable not only under a metaphorical point of view…) share with the previous radiations paragraph the same lack of accommodation details and a very similar approximated method to derive the applicable requirements. Hence, the same hints collected into table 6.8.3-1 are helpful or, rather, would be so in the event of their upgrading and completion.

The applicable requirements are in the Environmental Requirements Document of ESA (issue 3 draft 8, chapter 11), despite they are not to-date vs. the new ExoMars double mission profile (whose synthesis is reported in the previous fig. Figure 6.8.3-1). In particular, in that document local table 11.1, the time-integrated flux or fluence, or, as reported in the caption: the *Cumulative number of meteoroid impacts, N, per* m^2 *from 1 side to a randomly oriented surface for a range of minimum particle sizes as obtained by the Grün Model*. These results are for the ExoMars mission total up to landing, a duration of 1750 days, so that a rough estimate of the values for a ~ 3.5 year-long science mission on the Orbiter could be obtained by linearly downscaling those values by ~ ¾ .

The deduced values – by which the probability of non perforation / penetration is derived – does not look like very "risky" for a fully well-sheltered spacecraft hull, and their inside, too, but if a Paylaod Instrument – in particular: one of its delicate optical part – is exposed with (or even without) a thin protection to the external, the damage may become a concrete possibility and countermeasures not to endanger the mission success shall be foreseen. This activity is postponed after the availability of detailed design / accommodation elements.

A1.8.5 Planetary Protection and Contamination Requirements

A1.8.5.1 Introduction

The ExoMars Orbiter is classified as Planetary Protection Category III.

The implementation requirements for category III mission include impact avoidance and contamination control among others, e.g., the Orbiter shall be assembled and maintained in ISO level 8 cleanrooms or better, with appropriate controls and procedures .

A1.8.5.2 Planetary Protection Orbiter Payload Requirements

All spacecraft hardware shall be compatible with alcohol cleaning (IPA or ethanol). Comment: Use either sterile alcohol or filter through 0.2 micron filter.

All spacecraft hardware shall be compatible with damp swab assays as per assay procedure D1/E1 described in ECSS-Q-ST-70-55C.

The average bioburden density of the instrument hardware at delivery shall be less than 1000 spores/m2 (TBC by TAS-I recontamination analysis) on exposed internal and external surfaces.

An organic materials inventory of bulk constituents present in quantities of 1 kg or more shall be provided for all launched hardware. The inventory shall include the following information: Identifier (e.g., FM 300 Epoxy Film adhesive), chemical composition, use (e.g., bonding of heaters for cruise stage shunt radiators), mass estimate, rating and reference for outgassing, process parameters (if processed), and supplier.A 50-g sample of any organic material of which 25 kg or more is used shall be delivered with the instrument flight model.

Documents shall be prepared by PI to be submitted according to the document delivery schedule.

A1.9 Ground Support Equipment Design and Interface Requirements

A1.9.1 Mechanical Ground Support Equipment

Together with each instrument HW model the PI shall deliver the Mechanical Ground Support Equipment (MGSE) necessary to transport, handle and integrate the instrument hardware, accompanied with appropriate documentation and proof load and calibration certificates.

A1.9.2 Electrical Ground Support Equipment

Together with each instrument model the PI shall deliver the Electrical Ground Support Equipment (EGSE) needed to electrically stimulate the instrument and to perform analysis of instrument TM during system tests. The EGSE delivered items shall be accompanied with appropriate documentation and calibration certificates.

Instument EGSE shall be made up at least of the following items:

- One or more Instrument EGSE workstations in charge of processing P/L telemetry and to ask for delivery of telecommands.
- One or more equipment to generate electrical stimuli to the experiment (if needed).
- A dedicated Interface Test Equipment to verify the health status of the Instrument stand-alone, prior integration to the spacecraft.
- All cabling and ancillary items necessary to properly use and operate the abovementioned equipments.

The Instrument Station in charge of performing analysis of instrument scientific TM shall communicate with the Central Checkout System (CCS) via a LAN with TCP/IP protocol.

The Instrument EGSE will receive Instrument telemetry directly extracted from the Spacecraft Telemetry and routed to the Instrument EGSE workstation through the CCS (Central Checkout System).

The commanding of the Instrument is conducted only through the main operator console of the CCS.

TM data exchange over the LAN shall be at Source Packet level following the EGSE protocol to be defined by ESA.

The nominal monitoring of the Instrument shall be done on the Instrument station. For a limited set of parameters, the CCS can be in charge of the instrument's housekeeping monitoring.

The instrument ground support equipment shall remain at the spacecraft integration site until launch.

The PI shall remain responsible for the maintenance of this equipment.

The PI shall also provide the necessary manpower and expertise support to integrate the instrument EGSE into the system EGSE. Moreover the PI shall provide on-site support for usage and operation of any EGSE whenever needed in the frame of system level test campaigns.

Detailed EGSE I/Fs definitions will be provided later.

A1.9.3 Special Ground Support Equipment

Together with each instrument HW model the PI shall deliver any Special Ground Support Equipment (SGSE) deemed necessary in support of instrument calibration, interface verification, polarity/health check of optical elements, sensors physical stimulation. The SGSE shall be agreed on a case by case basis depending upon single Instrument needs.

Note. Examples of SGSE are: Optical GSE to perform optical stimulation of camera heads, targets for Instrument calibration, etc…

In case purging or other specific maintenances are periodically needed, the Instrument team shall provide all the equipments necessary to accomplish these operations.

The SGSE delivered items shall be accompanied with appropriate documentation and calibration certificates.

The PI shall remain responsible for the maintenance of the SGSE and for their on-site usage in the frame of system test campaigns.

A2 INSTRUMENT ASSEMBLY, VERIFICATION AND TEST REQUIREMENTS

A2.1 AIV Sequence Overview

A2.1.1 INTRODUCTION

The objective of the instrument Verification Programme is to demonstrate that the instrument design is fully compliant

- with the instrument scientific goals;
- with the mission environment;
- with the spacecraft performance;
- with the spacecraft interface requirements;
- with the operational requirements;
- with the provided operational documentation;

hence capable to contribute to the overall scientific goals.

This section establishes the verification requirements for qualification and flight certification of the instrument units giving specific test levels, durations and describing acceptance and qualification tests and analytical methods for implementing the requirements.

A2.1.2 DEFINITIONS

➢ **Qualification Test**

A Test intended to demonstrate that the item will perform as specified under conditions exceeding those specified for ground handling, launch, and operations in space.

The purpose is to detect intrinsic deficiencies in the design, materials chosen and manufacturing process and to validate safety margins. It is not intended to exceed design safety margins or to introduce unrealistic failure modes.

➢ **Acceptance Test**

The purpose of acceptance testing is to demonstrate the adequacy and readiness of an item for delivery and subsequent usage. The acceptance test shall also demonstrate that the item is free of material and workmanship defects, integration errors, and performs according to its required functions.

- **Environmental Tests**

Environmental tests shall be conducted on the flight or flight configured hardware to assure that the flight hardware will perform satisfactorily in one or more of its flight environments. To this class of test belong: Acoustic, Vibration, Thermal Vacuum and EMC tests. They are normally combined with functional testing providing it is compatible with test objectives.

- **Functional Tests**

During a Functional Test an item is operated in accordance with defined operational procedures to determine that functional characteristics are within the specified requirements. According to the needs of verification it can have several degrees complication and depth. The Full Functional Test (FFT) and the Short Functional Test (SFT) are subsets of this type.

Short Functional Test (SFT)

The objective of the SFT is to demonstrate nominal operation and correctness of the major functions of an instrument, for instance after an environmental test or a transport activity.

- **Performance verification**

Determination by a combination of test and analysis activities that the complete instrument or instrument unit can operate as intended in a particular mission: this includes proof that the design of the complete instrument or instrument unit has been qualified and that the particular item has been accepted as compliant to the functional and performance requirements, and is ready for delivery and subsequent usage.

- **Thermal Balance Test**

A test conducted to verify the adequacy of the Thermal Model, the adequacy of the thermal design, and the capability of the thermal control system to maintain thermal conditions within established mission limits.

- **Thermal Cycling Tests**

Tests to be conducted to verify that the instrument or instrument units can withstand thermal cycles without degradation of its performance. Often this is performed under vacuum conditions (see below).

- **Thermal Vacuum Test**

A test to demonstrate the validity of the design in meeting its functional and performance characteristics in vacuum and in a thermal environment equivalent to the worst conditions expected for the mission. The test can also uncover latent defects in design, parts and workmanship.

- **Static Loads**

The maximum combination (longitudinal and lateral) of static loads which acts on an instrument, during the various segments of the flight profile. It consists of steady state accelerations (e.g. due to engine constant thrust) and quasi-static loads which are structure borne loads generated by the launch vehicle in the low frequency (less than 100 Hz) range (e.g. engine cut-off loads).

- **Sinusoidal Vibration Test**

The purpose of sinusoidal vibration testing is to demonstrate the ability of the equipment to withstand low frequency sinusoidal excitations in line with launcher requirements, and to verify the adequacy of the mechanical model of the unit. This test can also be used to demonstrate compatibility with the static loads.

- **Random Vibration Test**

The purpose of random vibration testing is to demonstrate the ability of the equipment to withstand the random excitation produced by the launcher, increased by a qualification margin, and to the transmitted acoustic noise excitation.

- **Acoustic Vibration Test**

An environment induced by high-intensity acoustic noise associated with various segments of the flight profile: it manifests itself throughout the instrument in the form of directly transmitted acoustic excitation and as structure-borne random vibration excitation.

This test can be considered unnecessary at unit-level, if a Random Vibration Test is performed.

- **Shock test**

Spacecraft are subjected to shocks during launcher stage separation, fairing and carrying structures jettisoning and on actual spacecraft separation, as well as during parachute deployment before and impact of landing. Shock tests are to be conducted for each unit to guarantee the survival to the worst-case shock environment that can be experienced by this unit.

- **EMC Tests**

The purpose of the EMC test is to demonstrate that the electromagnetic interference characteristics of the equipment (emission and susceptibility) does not result in malfunction of the equipment and to verify that the equipment does not radiate or conduct interference that can result in malfunction of other system or instrument equipment.

These are divided into:

- CONDUCTED EMC
  Test conducted at harness level
  - Emission
    Test aimed to verify that the item conducted emission are below a specified profile defined in order to avoid, with a reasonable margin, that the system items are disturbing each-others.

- Susceptibility

Test aimed to verify that the item is not susceptible, with a reasonable margin, to the conducted emissions generated by the other system items.

- RADIATED EMC

Test conducted with RF-fields

- Emission

Test aimed to verify that the item radiated emission are below a specified profile defined in order to avoid, with a reasonable margin, that the item is disturbing neither the launcher nor disturbing the other items of the spacecraft.

- Susceptibility

Test aimed to verify that the item is not susceptible, with a reasonable margin, to the radiated emissions generated by the launcher and other system items.

➢ **Electrostatic Discharge (ESD)**

Test aimed to verify that Electrostatic Discharge, produced by a calibrated ESD Generator in the proximity of critical parts, to show that possible discharges would not induce unit malfunction or cause permanent damage.

➢ **Verification methods**

Possible verification methods are Inspection, Analysis, Review of Design, Test, or a combination thereof. The allocations of these methods are based upon design analyses, design maturity, complexity of the item, criticality category and associated cost. Testing shall be the preferred method used for verification.

- **Analysis (A)**

  Verification by analysis is a process used in lieu of, or in addition to, other verification methods to verify compliance to specification requirements. The selected techniques may include, but not be limited to, engineering analysis, statistics and qualitative analysis, computer and hardware simulations, and analogue modelling.

  Analysis may be used when it can be determined that (1) rigorous and accurate analysis is possible, (2) test is not cost effective, and (3) verification by inspection is not adequate.

- **Similarity (S)**

  As a subcategory of analysis, similarity is referred to, when the article under verification is similar in design, manufacturing process, and quality control to another article that has already been verified to equivalent or more stringent requirements. The verification activity consists of the assessment and review of prior test data, hardware configuration and application. If the previous application is considered to be similar, but not equal to or greater in severity, additional qualification tests shall concentrate on the areas of new or increased requirements.

- **Review of Design (R)**

Review-of-design is a verification method in which verification is achieved by validation of records or by evidence of validated design documents or when approved design reports, technical descriptions, engineering drawings unambiguously show that requirements are met.

- **Inspection (I)**

  Inspection is a method of verification that determines conformance to requirements without the use of special laboratory equipment, procedures, test support items or services. Inspection uses standard quality control methods to verify compliance with requirements of construction features, document and drawing compliance, workmanship standards, and physical condition. Emphasis is on observation of physical characteristics rather than performance.

- **Test (T)**

  Verification by test will be used for verification of both functionality and environmental aspects. In particular the ability of the item under test to properly survive and operate in the foreseen environment will be tested at least in extreme and representative environmental conditions.

  Functional tests will be performed at the various levels as applicable (i.e. equipment/subsystem/module) as well on the integrated spacecraft during an Integrated System Test (IST).

  The test programme will be conducted to demonstrate functionality of the complete system in nominal and limit conditions.

  Simulators of the external interfaces, e.g. launcher, Ground Segment, of the item under test might be used during these tests, as required to verify interfaces.

A2.1.3 DOCUMENTATION

A2.1.3.1 Instrument Development Plan

1. The PI shall prepare a Verification Plan (called Instrument Development Plan) defining the tests and analysis that collectively demonstrates that hardware and software complies with the mission, design, scientific requirements laid out in the E-PIP.

Note: The Instrument Development Plan shall highlight the overall approach which will be undertaken by the instrument consortium to accomplish the instrument qualification and acceptance. When appropriate the interaction of the tests and analysis shall be described.

2. The Instrument Development Plan shall be complemented by analysis reports, test procedures and upon test completion by test reports.

A2.1.3.2 Verification Control Matrix

1. The PI shall provide a verification matrix that summarizes all the tests that will be performed on each instrument unit and on instrument system level.

The purpose of the matrix is to provide, in a synthetic manner, a reference to the test programme in order to prevent the deletion of a portion of the test programme without an alternative of accomplishing the verification objectives. It further ensures that all flight hardware has seen environmental exposures that are sufficient to demonstrate acceptable workmanship.

2. The matrix shall provide traceability of the qualification heritage of the instrument units hard- and software.

3. The matrix shall provide traceability of the verification of the design and test requirements contained in the E-IRD.

4. All flight hardware, spares and prototypes (EM/QM) shall be included.

5. The matrix shall be included as annex to the Instrument Development Plan and provided to ESA and its selected Prime at the major reviews (and updated as changes occur).

A2.1.3.3 Analysis Reports

For each analysis verification activity the PI shall submit a formal report, describing the mathematical model and the relevant outputs and interpretations.

A2.1.3.4 Test Related Documentation

• Test Specification:

1. For each test defined in the Instrument Development plan (e.g. EMC, vibration, electrical, thermal, etc.), the PI shall provide a test specification describing the relevant configuration, test setup, facility, test goals, success criteria etc.

• Test Procedures:

2. For each test defined in the Instrument Development Plan (e.g. EMC, vibration, electrical, thermal, etc.), the PI shall provide a detailed step-by-step procedure.

• Test Report:

3. For each test defined in the Instrument Development Plan (e.g. EMC, vibration, electrical, thermal, etc.), the PI shall provide a test report containing the objectives, a description of test setup, a result summary result summary and the as-run procedure.

The test related documentation will be subject of review during the project lifetime by ESA/ NASA.

A2.2 Instrument Model Philosophy

A2.2.1 Instrument Structural Thermal Model - STM

The Instrument Structural -Thermal Model will be integrated on the Orbiter STM in order to perform the environmental qualification test campaign.

The Experiment STM shall reproduce the real experiment behavior from a thermal and structural point of view and be flight representative for the following characteristics:

- MCI (mass, centre of gravity, inertia)
- Footprint
- Overall dimensions
- Area and properties of conductive surface
- Properties of external surfaces (and preferably area)
- main vibration mode frequency and participation factor (if mass exceeds 30 kg)
- power dissipation through internal heaters (and preferably power profile if significant)

The main purposes of the STM models are to:

- Verify the Experiment accommodation on the Orbiter
- Preliminary verify the instrument structural design
- Verify the mathematical mechanical models by dedicated vibration test
- Derive, respectively confirm the mechanical loads for instrument qualification
- Support qualification of spacecraft structures in a representative environment
- Preliminary verify the instrument thermal design
- Support qualification of spacecraft thermal design in a representative environment
- Verify the mathematical thermal models by dedicated thermal test
- Debug the mechanical integration procedures that will be applied on PFM

In case the instrument includes some mechanisms (shutters, covers, actuators, etc) it is a good practice to have a flight representative mechanism on STM: in this way that mechanism can be preliminary verified in the frame of STM test campaign.

A2.2.2 Instrument Software Model - ISM

The instrument Software Model is a pure SW package which shall be representative of the flight instruments in terms of:

- Capability to exchange data with the orbiter bus, following the specified bus protocol for each physical I/F
- Capability to manage commands and telemetry following the Orbiter Bus SW I/F specifications
- Capability to generate a flight representative data volume in the different operative mode
- Capability to simulate instrument operative modes and time synchronization

The ISM will be installed on the EGSE of the Orbiter Bus Avionic Test Bench (ATB) to simulate the instrument to Orbiter OBSW I/F. Design-, I/F-, and documentation-details for the ISM are TBD.

A2.2.3 Instrument Electrical Test Model - ETM

The instrument Electrical Test Model shall be representative of the flight instruments in terms of:

- Interface connectors
- Electrical I/F with the Orbiter Bus, satisfying the flight electrical requirements
- Capability to exchange data with the orbiter bus, following the specified bus protocol
- Capability to manage commands and telemetry following the Orbiter Bus SW I/F specifications
- Capability to generate a flight representative data volume in the different operative modes
- Functional Interfaces (e.g.: operative modes, time synchronization, etc.)
- Capability to upload/download instrument SW and accessibility to all memories
- Representative electrical conductance EMC characteristics
- Representative mechanical footprint and envelope

Flight-representative scientific capabilities are not required of the instrument ETM.
The main purpose of this model is to validate the functional/electrical links with the Orbiter Bus. The content of the scientific data is irrelevant, only the packet structure (length, header field content, etc) and volume is verified. HK, events and diagnostics shall be fully compliant with flight model.

The instrument ETM shall be able to be subjected to stand-alone functional testing after delivery and prior to integration.

The Instrument ETM will be electrically integrated on the Orbiter Avionics Validation Model (AVM) together with the Engineering Models of the Orbiter Bus avionic units plus a flight representative harness.

After that, the resulting Orbiter AVM will be used mainly to:

- Verify the instrument/Orbiter Bus electrical I/Fs
- Verify the Orbiter OBSW in a real HW environment
- Perform the Integrated Sub-System Test (ISST) and the Integrated System Test (IST)
- Perform reference runs for the test that will be repeated on PFM
- Debug and preliminary verify the Flight Operation Procedures (FOP)
- Debug the test sequences that will be reused on PFM
- Perform the conducted EMC (confidence level)
- Validate the Electrical Ground Support Equipment (EGSE) and the related procedures

Furthermore, during the mission the ETM integrated on the AVM will remain available to support SW maintenance, investigations, and SW upgrading.

Note: In case instrument Qualification Model (QM) is available (temporarily) it can be delivered in place of the ETM, or swapped with the ETM, provided that QM functionalities satisfy the minimum set of requirements listed above.

A2.2.4 Instrument Qualification Model - QM

The instrument Qualification Model is the instrument model used to qualify the instrument for flight. The QM needs to be subjected to environmental testing at qualification levels and durations. In case of need it may be integrated on the FM Orbiter Bus. The QM shall:
1) have full functionality (although quality of science products may be less than flight),
2) have the flight item fit and form factor,
3) use flight materials, processes, and parts.

The QM should undergo at least the following testing at unit level:

- Mechanical & Electrical testing
- Full Functional Test
- Environmental Test Campaign including:
  - Sine Vibration
  - Random Vibration
  - Thermal Vacuum Cycling
  - EMC testing (including conducted & radiated EMC, auto-compatibility)

Note: an Engineering Model meets 1) and 2) of the QM, but does not need to be subjected to environmental tests, and is not sufficient to fulfill qualification of the instrument.

If delivered, the instrument QM shall be able to be subjected to stand-alone functional testing after delivery and prior to integration.

A2.2.5 Instrument Flight Model - FM

The instrument Flight Model is the flight instrument used for the mission. The instrument FM shall be subjected to acceptance testing (same tests as QM but at acceptance level and duration) at instrument level prior to shipment to the spacecraft. It will be integrated on the FM Orbiter Bus and involved before launch in the main following activities:

- Mechanical & Electrical I&T
- Experiment ISST (Integrated Sub-System Test)
- System Functional Test
- EMC testing (including conducted & radiated EMC, auto-compatibility)
- Environmental Acceptance Test Campaign including:

- Sine Vibration
- Acoustic
- SCC / LV Separation Test
- Thermal Vacuum Cycling

o Launch Campaign

The instrument FM shall be able to be subjected to stand-alone functional testing after delivery and prior to integration.

A2.2.6 Instrument Flight Spare Model – FS

Spare philosophy shall be proposed by the instrument Principal Investigator (PI) and defined in order not to exceed, in case of failure, a maximum down time of 5 weeks for Flight Hardware and 48 hours for GSE, during every nominal AIT sequence at unit, Subsystem or System level.
GSE spare parts shall be kept in stock only for those items, electronic boards and mechanical parts that cannot be directly provided through commercial vendors or that require very long procurement time. The instrument PI shall be responsible for the Spare Parts List definition and procurement upon Agency approval.

A2.3 Verification and Test Methods

A2.3.1 STRUCTURAL MATHEMATICAL ANALYSIS

A2.3.1.1 General

1. The mechanical performances of the instrument shall be calculated by means of Structural Mathematical Models (SMMs).
2. The PI shall use models for his own design and shall also provide model(s) to the Agency for use during spacecraft design and test results predictions. The PI shall update the models according to instrument and system test results.
3. The instruments SMMs shall be delivered according to the dates defined in the project scheduleThe detailed requirements for each model / analysis are listed in the following sections.

A2.3.1.2 Detailed Stress Analysis

1. The PI shall perform and deliver a detailed Stress Analysis. This shall include at least:

• A description of the configuration analyzed with reference to interface controlled drawings

• A description of the mathematical finite element model and/or of the assumptions taken to verify the structure

• A description of all possible loading cases and an identification of the design driving load cases or load combinations

• Detailed description of the most loaded elements listed with relevant stresses, and the loading cases that generated them

• A list of the materials and structural components with characteristics data sheets (including long-life effects under space environment)

• A set of tables showing, for each structural element, the maximum value on each type of stress or combination of them with the allowable value, and the load case that determines it, together with its margin of safety.

A2.3.1.3 Mechanism Functional Analysis

1. Each mechanism shall be analyzed functionally and the following information shall be at least supplied:

• A detailed description of the mechanisms, with particular reference to its discrete components (bearings, actuators, switches) and to its operational/safety features

• A detailed description of the operating modes with reference to ground and orbital activations

• A definition of operating loads in various configurations with a clear definition of analysis assumptions. In particular, the functional analysis shall include the effects of the worst environmental conditions that could produce distortions or changes in clearance between movable parts (e.g. thermal gradient through bearings)

• A Failure Modes, Effects and Criticality Analysis (FMECA) defining the failure modes and the functional margins of safety against each of them

• A performance description of the control system that the mechanisms form a part of.

A2.3.1.4 Dynamic Model

1. The structural mathematical model of the instrument shall be detailed enough to predict the dynamic loads to size the structure elements, and the interface loads in particular, with sufficient accuracy.

2. This means that it shall be able to reproduce the low frequency modes with an upper limit to the frequency range to be defined on a case-by-case basis.

3. The model shall fulfil the requirements of the Design Verification Requirements, when compared to test results.

4. A finite element model shall be accompanied by a clear description of the model itself and of the assumption made in the model, particularly concerning the boundary conditions at the spacecraft interfaces (i.e. hard mounted I/F). For mechanisms, two or more models (stowed, deployed; general position), may be required.

5. All mathematical models shall be maintained in current configuration.

6. The mathematical models to be delivered to ESA shall be compiled in accordance with the ExoMars Prime Requirement Specification for Structural FEM Models (TBC).

A2.3.1.5 Dynamic Analysis

1. The PI shall perform a structural dynamic analysis and include at least:

• A description of the configuration analyzed with reference to interface controlled drawings

• A description of the mathematical finite element model and/or of the assumptions/reductions introduced in the analysis

• A description of the checks performed on the model to verify its quality (e.g. rigid body modes, residual forces)

• A list of eigen-frequencies with relevant mode type and associated modal effective

• Plots and listings of eigen-vectors.

2. The PI shall perform, where necessary (large exposed areas, e.g. mask):

• frequency analysis and response

• acoustic response analysis.

A2.3.2 THERMAL ANALYSIS

A2.3.2.1 General

1. A thermal analysis of a payload unit shall be performed by the unit responsible with the following objectives:

• Verify that internal parts and materials are below their maximum allowed temperatures under acceptance/qualification testing;

• Verify the ability of the thermal design to maintain the internal required temperatures and intended heat flow pattern that ensure performance requirements under the worst flight cases;

• Verify the compliance with the spacecraft interface requirements under the worst flight cases.

A2.3.2.2 Thermal Design Cases

A number of thermal conditions given in the table below can be taken into consideration during the analysis campaign. This list is not exhaustive especially for the unit internal design that might require more cases to prove the feasibility of the thermal design.

Case	Type	Properties	Dissipations	Environmental Heat Fluxes
Flight Hot Op.	steady-state	EOL	Max (EOL)	
Flight Cold Op.	steady-state	BOL	Min (BOL *	
Flight Cold Non-Op.	steady-state	BOL	Min	
Acceptance Test	steady-state	BOL	Min/max (BOL)	
Qualification Test	steady-state	BOL	Min/max (BOL)	

Table A2-1 Thermal Design Cases

* during non-operating phases, a heating power inside the unit might be necessary

A2.3.2.3 Thermal Mathematical Models

1. Unit thermal analyses shall be performed by the unit responsible using a Detailed Thermal Mathematical Model (DTMM) and a Detailed Geometrical Mathematical Model (DGMM).

2. A unit Interface Thermal Mathematical Model (ITMM) and Interface Geometrical Model (IGMM) for coupled thermal analysis with the spacecraft shall be derived from the DTMM and the DGMM, respectively.

3. Requirements to insure compatibility of the interface models with the spacecraft will be defined during the Definition Phase (TBC).

A2.3.2.4 Software Codes

For unit detailed thermal analysis, the following codes are recommended:

- Thermal network solver: ESATAN v 9.4 or higher;
- Radiation coupling computation: ESARAD 5.6.1 or higher.

For ITMM exchange, the following codes are required:

- Thermal network solver: ESATAN;
- Radiation coupling computation: ESARAD.

A2.3.2.5 Deliverable Models

1. The ITMM shall be regularly updated and delivered according to the unit design maturity.

As a minimum, the following model updates shall be delivered for each unit:

- Preliminary model of the flight unit;
- Updated models of the flight unit after any major design modification;
- Updated models of the flight unit after the thermal verification tests;
- Model of the STM unit if this is required by the S/C verification programme;
- Final model of the flight unit with measured dissipations.

A2.3.2.6 Thermal Analysis Uncertainties

1. The temperature of the unit internal parts shall be predicted by adding the thermal analysis uncertainty to the computed temperatures. In the hot cases, the absolute value of the uncertainty will be added while, in the cold cases, the absolute value of the uncertainty will be subtracted. The uncertainty shall be assessed with a 99% confidence level

A2.3.2.7 Thermal Control Design Documentation

1. The PI shall deliver to ESA and its selected Prime the Unit Thermal Design Description Report in the format described in TBD - to be provided later.

2. The PI shall deliver to ESA and its selected Prime the Unit Thermal Analysis Report in the format described in TBD - to be provided later.

3. The PI shall deliver to ESA and its selected Prime the Unit Thermal Tests Reports in the format described in TBD - to be provided later.

4. The PI shall deliver to ESA and its selected Prime the Unit Thermal Model Correlation Report (following thermal tests) in the format described in TBD - to be provided later.

5. The PI shall deliver to ESA and its selected Prime the Unit ITMM/IGMM Description Report in the format described in the TBD - to be provided later.

A2.3.3 TESTING, GENERAL RULES

A2.3.3.1 Test Sequences

The verification activities for instruments can be divided in

- Qualification Programme
- Acceptance Programme
- Recertification

- Incoming Inspection)

No specific environmental test sequence is required, but the test programme should be arranged in a way to best disclose problems and failures associated with the characteristics of the hardware and the mission objectives.

It is strongly recommended that the vibration/acoustic test precede the thermal vacuum test unless there is an overriding reason to reverse that sequence.

Qualification Programme:

1. The qualification programme shall demonstrate that the item will function within performance specifications under simulated conditions more severe than those expected from ground handling, launch and orbital operations.

As a guideline for the PI the following sequence of tests is highly recommended:

a. Visual Inspection

b. Dimensions Verification

c. Physical Properties

d. Functional Test

e. Low Level Sine

f. Shock

g. Sine Vibration

h. Low Level Sine

i. Random Vibration

j. Low Level Sine

k. Functional Test

l. Acoustic Noise (when applicable)

m. Functional Test

n. Thermal Vacuum

o. Functional Test

p. Grounding / Bonding / Isolation

q. EMC Conducted Emission / Susceptibility

r. EMC Radiated Emission / Susceptibility

s. DC Magnetic Properties

t. Purging Rate Verification

u. Visual Inspection

2. Limited Lifetime demonstration of elements concerned shall be incorporated in the qualification test programme or performed separately.

Acceptance Programme:

3. The acceptance shall demonstrate that the hardware is acceptable for flight and shall serve as a quality control screen to detect deficiencies.

As a guideline for the PI the following sequence of tests is highly recommended:

a. Visual Inspection

b. Dimensions Verification

c. Physical Properties

d. Functional Test

e. Sine Vibration

f. Low Level Sine

g. Random Vibration

h. Low Level Sine

i. Functional Test

j. Thermal Vacuum

k. Functional Test

l. Grounding / Bonding / Isolation

m. EMC Conducted Emission / Susceptibility

n. DC Magnetic Properties

n. Visual Inspection

Recertification:

4. The recertification shall certify that modified / repaired units are acceptable for flight. It is applicable for any unit which has been disassembled from the S/C after the system environmental testing and refurbished / repaired and then supposed to be re-integrated.

Note: The recertification is a limited acceptance certification and serves also as a quality control.

As a guideline for the PI the following sequence of tests is highly recommended:

a. Visual Inspection

b. Dimensions Verification

c. Physical Properties

d. Functional Test

e. Low Level Sine

f. Random Vibration - 1 axis

g. Low Level Sine

h. Functional Test

i. Thermal Vacuum (2 cycles)

j. Functional Test

k. Grounding / Bonding / Isolation

l. EMC Conducted Emission / Susceptibility

m. DC Magnetic Properties

n. Visual Inspection

Depending on the kind of refurbishment the programme of Recertification can be reduced in agreement with ESA and its selected Prime.

Incoming Inspections:

5. The incoming inspection at the Prime Contractor site shall verify that the Instrument is ready for integration into the S/C.

As a guideline the following sequence of tests will be performed:

a. Visual Inspection

b. Dimensions Verification

c. Physical Properties

d. DC Magnetic Properties (TBC)

e. Functional Test

f. Grounding / Bonding / Isolation

g. EMC Conducted Emission / Susceptibility

h. Review of completeness of documentation

A2.3.3.2 Test Level Tolerances

The test tolerances, unless otherwise specified are:

Temperature:

• -55°C to +150°C Tmax: 0 to +3°C,

Tmin: 0 to -3°C

Environmental heat fluxes:

• solar fluxes: +/- 3%

• infrared fluxes: +/- 3%

Pressure:

• Equal or above 0.1 mbar 10%

• Below 0.1 mbar 50%

Relative humidity: ± 5%

Sinusoidal vibration:

• Acceleration, amplitude ± 10%

• Frequency above 50 Hz ± 2%

Random vibration:

• Power spectrum density (50 Hz or narrower)

20 to 500 Hz ± 1.5 dB

500 to 2000 Hz ± 3.0 dB

• Overall g rms ± 1.5 dB

Static force: ± 5.0%

Acoustic: ± 1 dB

Electromagnetic Compatibility

- Voltage Amplitude: ± 5% of the peak value
- Current Amplitude: ± 5% of the peak value
- RF Amplitudes: ± 2 dB
- Frequency: ± 2%
- Distance: ± 5% of specified distance or ± 5 cm, whichever is greater

Magnetic Properties

- Mapping distance measurement: ± 1 cm
- Displacement of asse mbly Centre of Gravity (CoG) from rotation axis: ± 5 cm
- Vertical displacement of single probe centre line from CoG assembly: ± 5 cm
- Mapping turntable angular displacement: ± 3 degrees
- Magnetic field strength: ± 1 nT
- Repeatability of magnetic measurements (short term): ± 5% of ± 2 nT, whichever is greater
- De-magnetizing and magnetizing field level: ± 5% of nominal

Mass Properties

- Weight: ± 1 %
- Centre of Gravity: ± 5 mm
- Moments of Inertia: ± 10%

A2.3.4 Test Requirements

A2.3.4.1 EMC TEST REQUIREMENTS

A2.3.4.1.1 General Set-Up Requirements

1. The tests shall be performed in an ambient electromagnetic environment which is at least 6 dB below the performance levels required in section 3.6. Included in the ambient level are also emissions from test equipment, including unit-testers (EGSE) with its harness.

2. Measuring antenna ends shall not be closer than 1.0 meter from any electrically conductive elements during the test.

3. The tests shall be performed with test samples, unit-testers (EGSE) and harness placed on a conductive ground plane with a length greater than 2.5 meters and a width of more than 1 meter.

4. If a shielded room is used the ground plane shall be bonded to the room with low inductive bonds separated by less than 0.5 meter.

5. This connection shall be verified by a resistance test.

This connection of the ground plane is very important when the EGSE has to be located outside the shielded room because of emission or susceptibility excess.

6. In the cases where real electrical/electronic loads cannot be used these shall be simulated by dummy loads with similar characteristics.

It is forbidden to take the interface wires to ground if not done in the actual installation.

7. The power sources used for the tests shall have a well defined impedance below 10 MHZ.

8. The test harness shall be flight representative.

No shielding between the test set-up and measurement antennae is allowed.

9. Grounding of interfaces shall be in accordance with flight installation.

10. Bonding of units - unit tester etc. to the ground plane shall be verified by a bonding test.

11. The unit bond shall be similar to that specified for the actual installation except for conducted common mode emission/susceptibility tests when a ground strap between the grounding lug and the ground plane shall be used.

12. Radiated susceptibility tests shall be performed such that regulations and laws at the test location are met.

13. Reflection effects shall be minimized by means of absorber materials.

14. All equipment used for emission and susceptibility tests shall be calibrated and wear calibration certificates.

15. Passive equipment, such as antennae, current probes etc. shall have calibration curves from the manufacturer.

16. In order to reproduce the power bus impedance seen by the users and to standardize the measurement conditions used in different test sites, a Line Impedance Stabilization Network (LISN) shall be inserted between the EGSE power supply and the unit under test when performing emissions and susceptibility measurements on primary power lines. The LISN schematic and the relevant impedance versus frequency are chosen in accordance with the bus impedance mask and harness.

17. The LISN schematic and the relevant impedance versus frequency given in Figure A2 1 and Figure A2 2 shall be used.

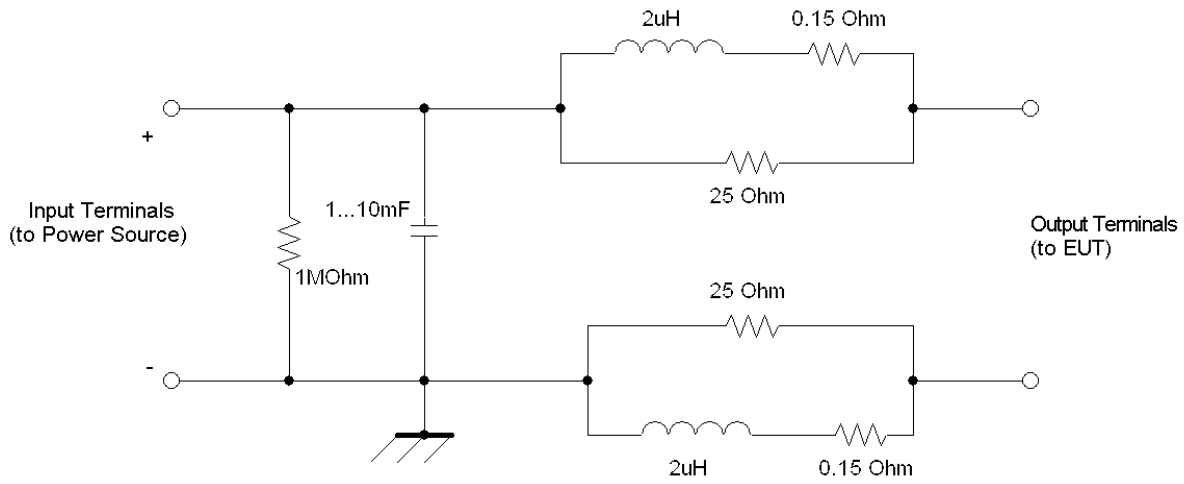

Figure A2 1 LISN Schematic

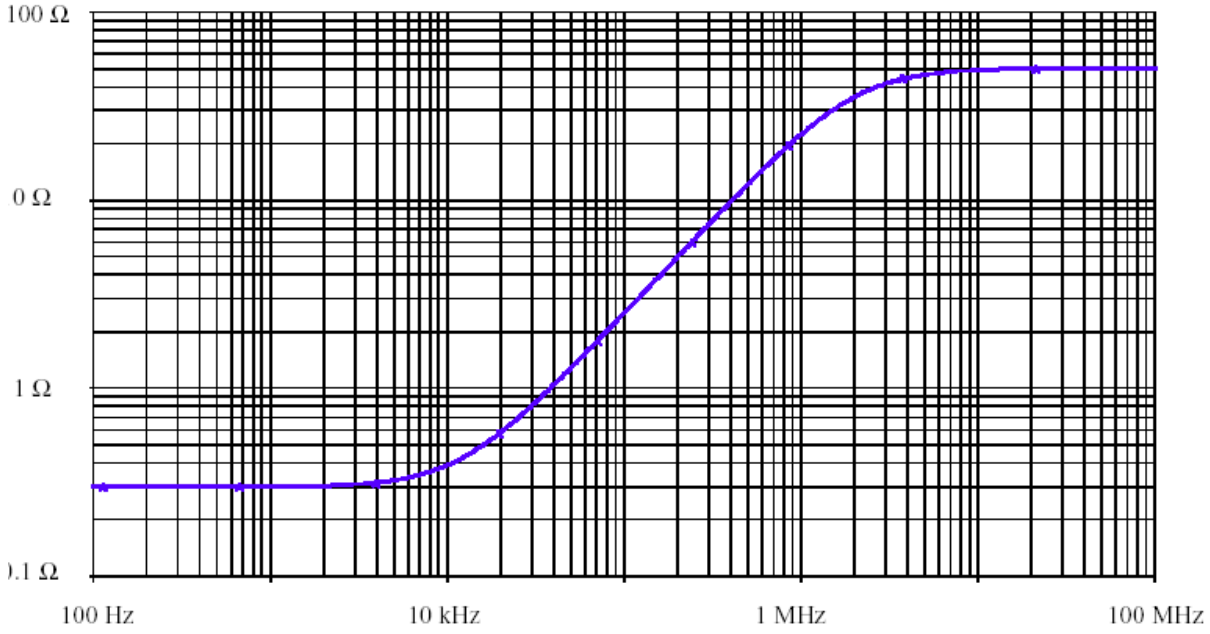

Figure A2 2 Output Impedance of the LISN with Shorted Input Terminals

6.7.1.1.1 EMC Test Categories

Development Test

These tests should be performed at an early stage of the programme to evaluate the design approach, indicate critical areas when re design improvement is required and assure design compliance with EMC requirement and support analytical methods or generate essential design data.

Qualification Test

1. For the qualification the instrument EQM shall be subjected to a full EMC test sequence outlines below:

- Bonding
- Isolation
- Grounding and conductivity test of space exposed surfaces
- Conducted emission
- Conducted susceptibility
- Radiated emission
- Radiated susceptibility
- Electrostatic discharge susceptibility
- DC magnetic field characterization

Note: for DC magnetic field characterization a special facility is required (for example IABG, Braunschweig) the effort shall be considered and discussed with ESA and its selected prime.

Acceptance Test

2. This test shall be accomplished on all FM hardware. Acceptance level testing shall comprise of the verification of

- Bonding
- Isolation
- Grounding and conductivity test of space exposed surfaces
- Conducted emission
- Conducted susceptibility
- Electrostatic discharge susceptibility

Note: Further details will be elaborated by the ESA selected Prime in the course of Phase B-C/D.

The EMC design and test specification shall be consulted.

A2.3.4.1.2 Bonding, Isolation and Grounding/Conductivity Tests

1. These tests shall be carried out to demonstrate compliance with the required Instrument characteristics for these points.

A2.3.4.1.3 Conducted Emission Test

The suggested test set-up is as shown in Figure A2 3. The tests are applicable at each signal and power input/output. Any switch for ON/OFF test will be positioned between the LISN and the unit under test. The transients are then measured on the power lines between the switch and the unit under test.

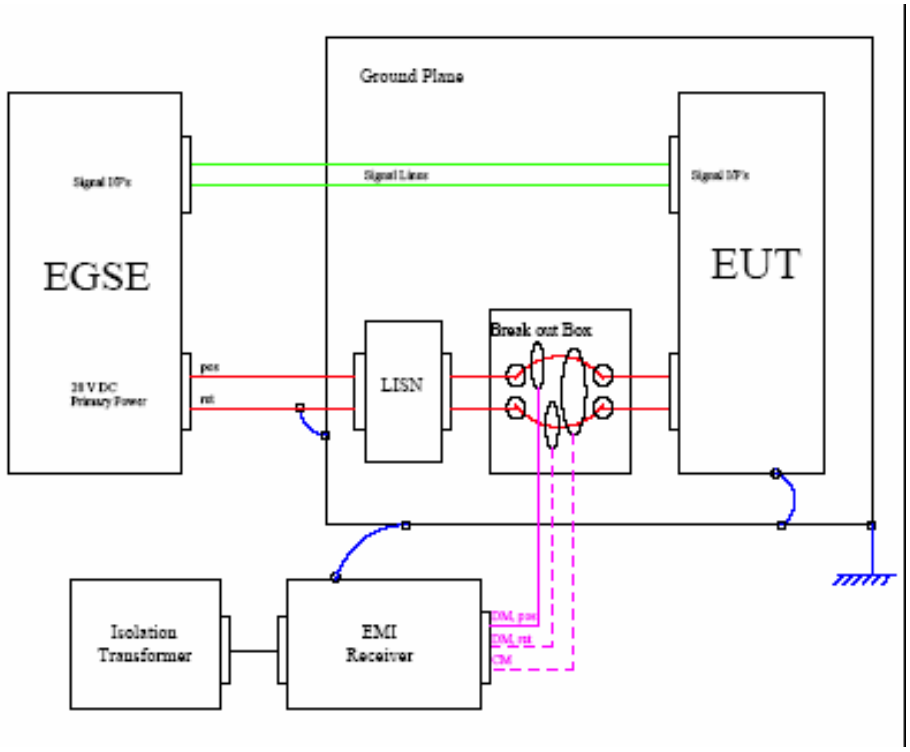

Figure A2 3 Conducted Emission – Test Set-up

A2.3.4.1.4 Conducted Susceptibility Test

The test set-up for power lines is shown in Figure A2 4.

1. The injected voltage relevant to the susceptibility threshold shall be monitored and recorded.
2. The injected current shall be limited to 1 Ampere peak on the input power lines.
3. The test set-up for signal lines, differential mode, shall be similar to the test set-up for power. The signal lines shall be loaded with electrical simulators of the interfacing circuits.

The test set-up for signal lines, common mode, is given in Figure A2 4 and Figure A2 5.

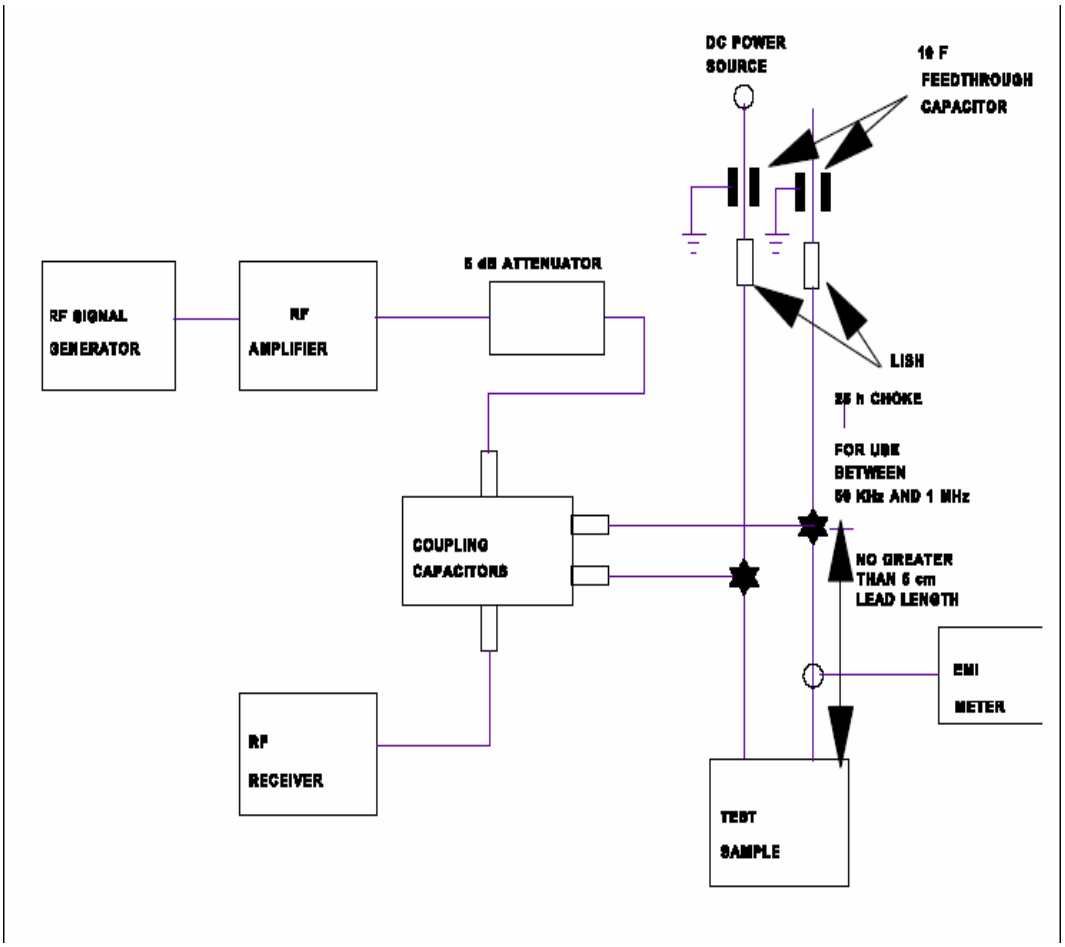

Figure A2 4 Conducted Susceptibility – Power Set-up

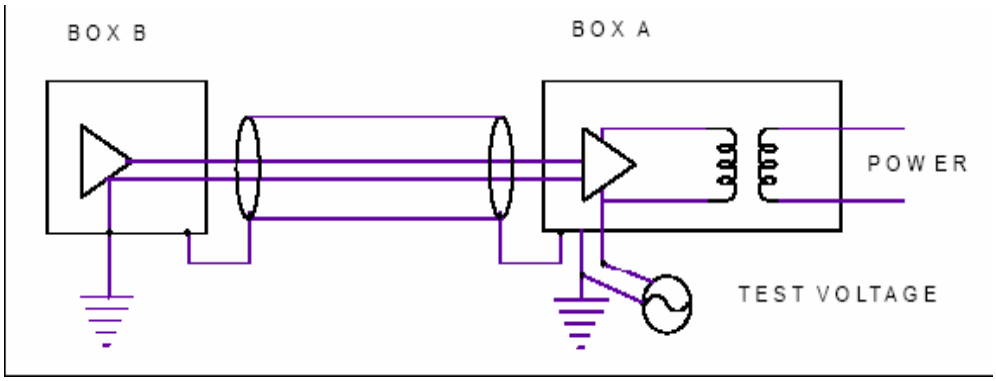

a) Test set-up for externally accessible ground wire

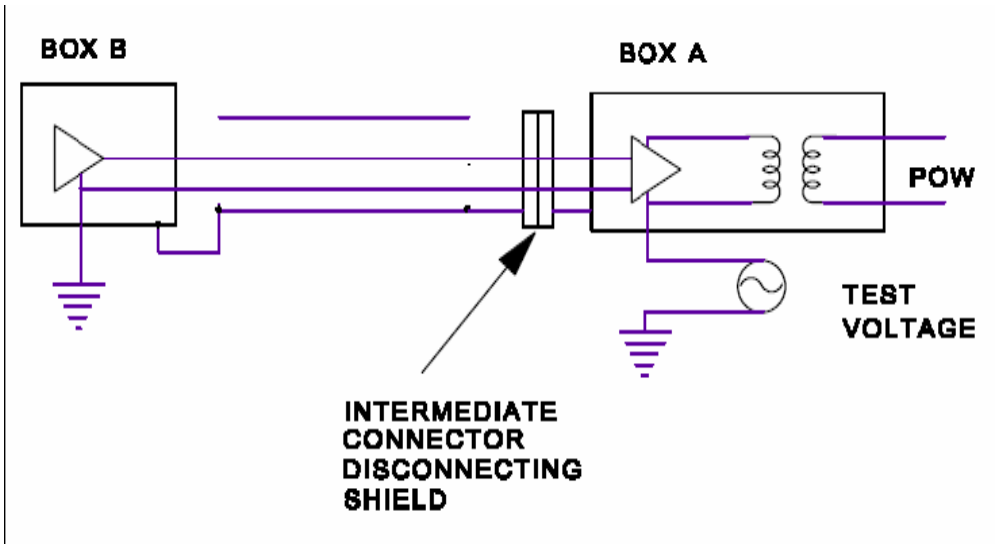

b) Test set-up when ground wire is not accessible. Box fitted from structure and shield disconnected

Figure A2 5 Common Mode Rejection Test Set-up

A2.3.4.1.5 Radiated Emission

The suggested test set-up is as shown in Figure A2 6. The emission at the antenna at 1 meter distance from the test object which gives the highest reading shall be the Radiated Electric Field Emission (REE).

1. Above 25 MHZ, the requirement shall be met for both horizontally and vertically polarized waves.

Radiated E-Field Frequency Range for Emission Test (TBC)

2. The upper frequency range of the measurement shall be in accordance with the following values:

• For an Highest Operating Frequency of Equipment < 1 GHz the required upper limit is "To tenth harmonic or 1 GHz whichever less";

• For an Highest Operating Frequency of Equipment 1-10 GHz the required upper limit is "To fifth harmonic or 10 GHz whichever less";

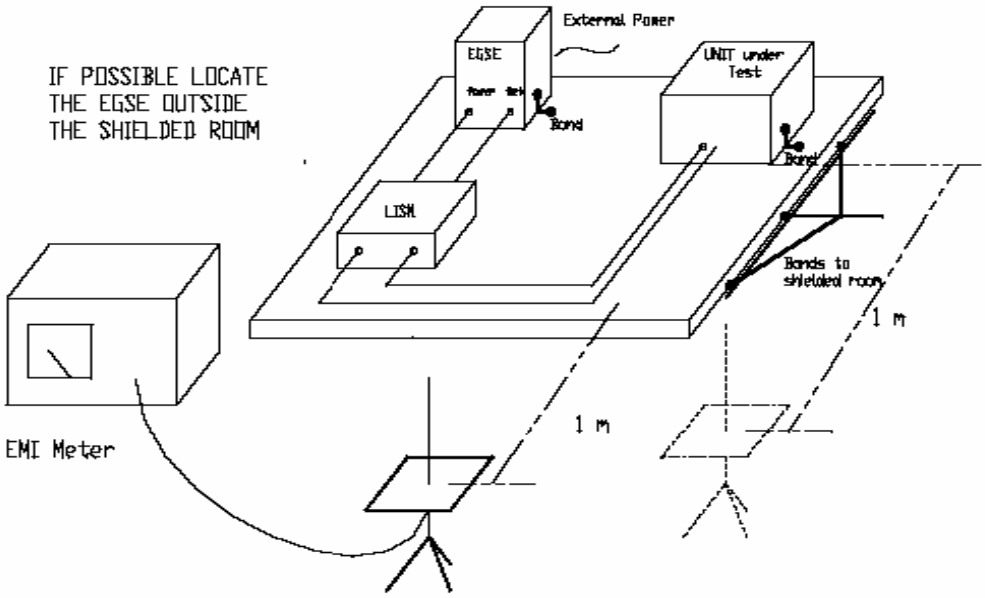

Figure A2 6 Radiated E-Field Emission Test Set-up

A2.3.4.1.6 Radiated Susceptibility

Radiated Magnetic Susceptibility (RMS)

1. The test set-up shall be as in Figure A2 7. The distance between the radiating antenna and the UUT shall be the most suitable to achieve the specified level of field strength in the test region.

2. For radiated susceptibility tests loop antennas together with the signal source shall be capable of supplying sufficient current to produce magnetic flux densities 10 - 20 dB greater than the applicable limit at the test frequencies.

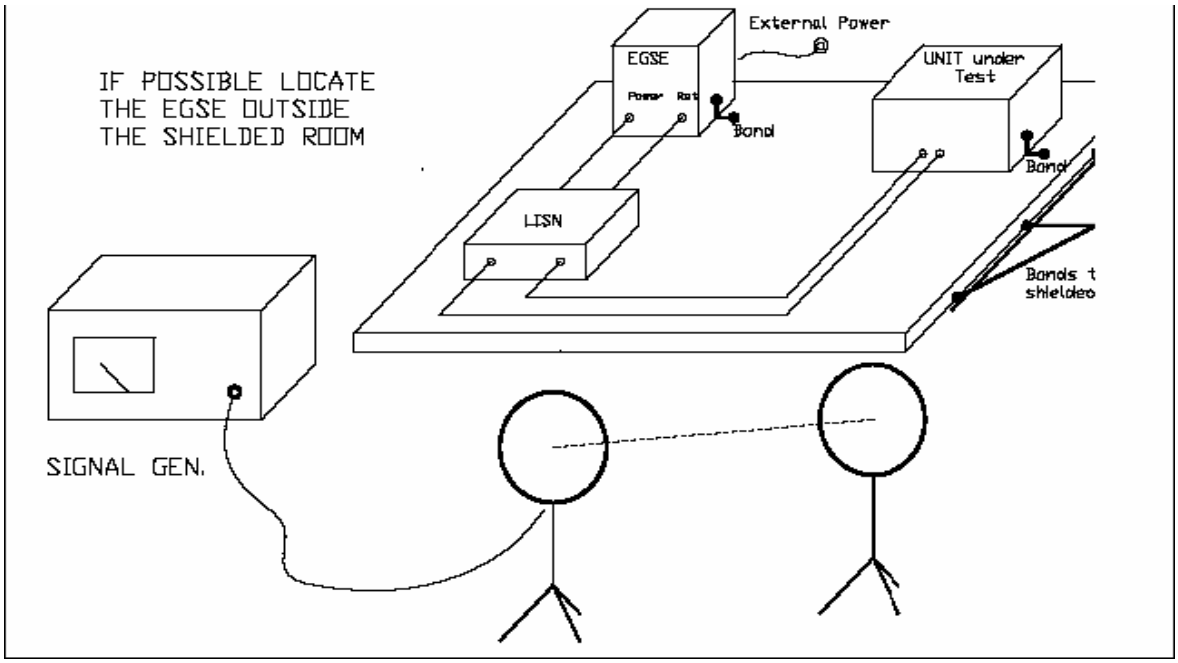

Figure A2 7 Radiated Magnetic Susceptibility Test Set-up

Radiated Electric Field Susceptibility (RES)

3. The test set-up shall be as in Figure A2 8. The distance between the radiating antenna and the unit under test shall be not less than 1 meter. In case the specified field strength cannot be achieved a shorter distance is permitted as long as the test region against the field strength is measured and specified.

4. The sweep speed for the test shall not be faster than 1 octave/minute and the sine wave signal shall be 30% amplitude modulated by 1 KHz square wave.

5. Above 25 MHz, the requirement shall be met for both horizontally and vertically polarized waves.

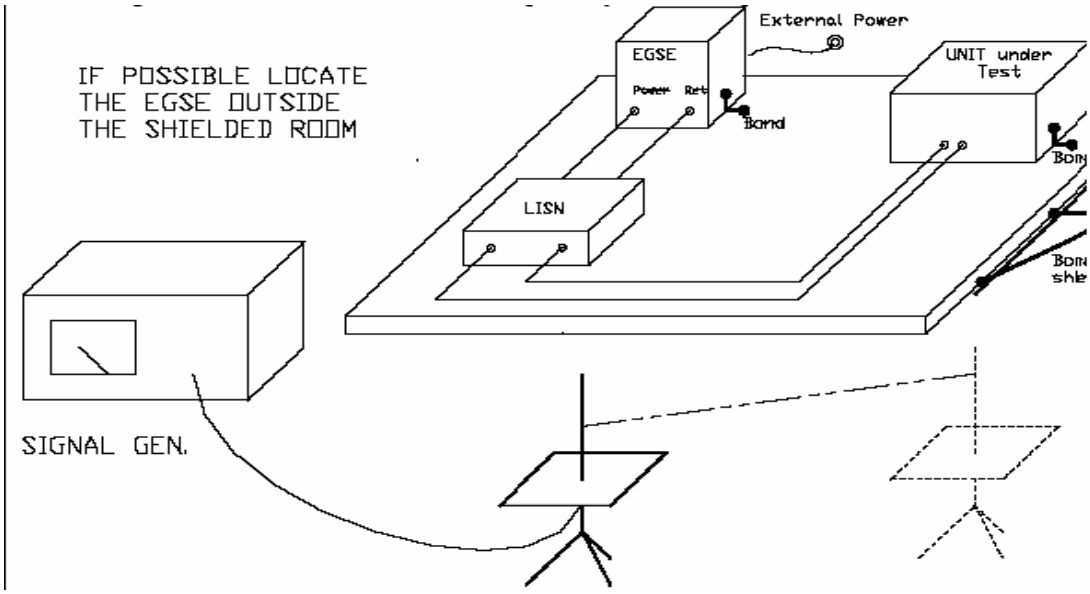

Figure A2 8 Radiated E-Field Susceptibility Test Set-up

A2.3.4.2 Electrostatic Discharge Tests (ESD)

Conducted ESD Susceptibility

Figure A2 9 contains a suggested arc source schematic capable of establishing the required radiated discharge.

1. The discharge circuit must be adjusted in order to get:

- a current rise time lower than 15 nS
- a current duration higher than 40 nS.

2. Any other equivalent type of circuitry can be used and shall be fully described in the relevant plan.

3. A minimum of 10 discharges shall be performed.

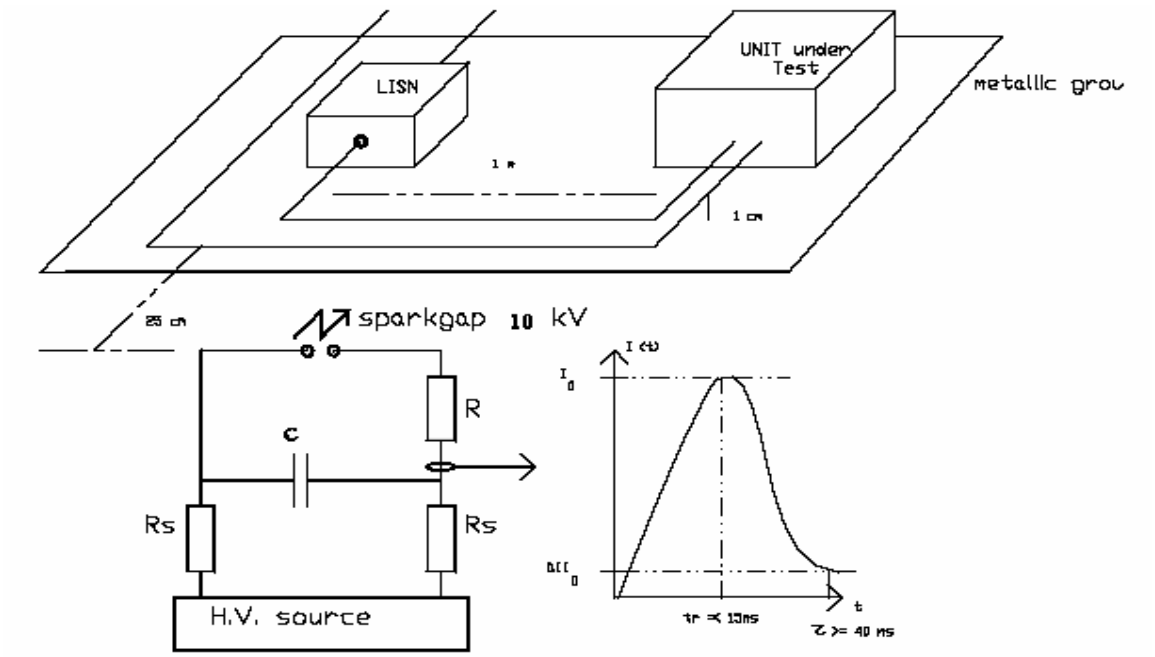

Figure A2 9 ESD Radiated Discharge Test Set-up

Conducted ESD Susceptibility

Figure A2 10 contains a suggested discharge generator capable of establishing the required current

(length of injection circuit shall be minimized in order to get the proper rise time).

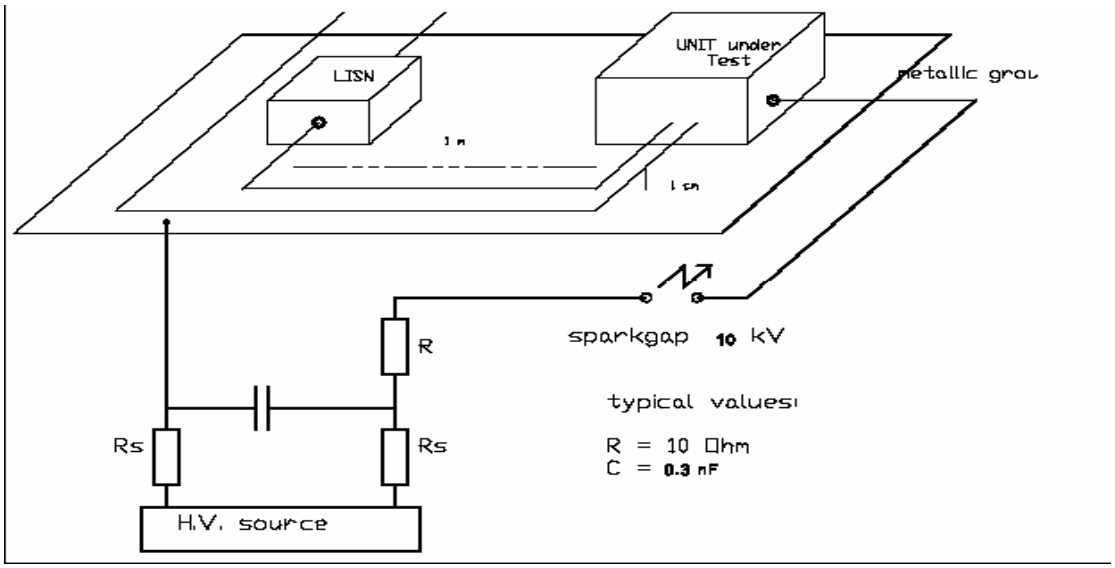

Figure A2 10 ESD Conducted Discharge Test Set-up

A2.3.4.3 STRUCTURAL TEST REQUIREMENTS

A2.3.4.3.1 Structural Test Setup

1. The instrument unit shall be tested in Launch configuration.

2. Test adaptors and / or non flight items shall be removed before test.

3. The instrument shall be vibrated in hard mounted configuration through the designated S/C interface points.

4. The PI shall provide any special test adapter required for the test.

5. The adaptor shall have a high first resonance frequency (above 2 kHz) in order not to influence the test. Any amplification from the fixture shall not contribute more than 1% to the G rms value during the random test.

6. Standard Instrumentation and procedural guidelines shall apply and be reflected in the procedure.

A2.3.4.3.2 Sine Vibration Test Levels

The qualification and acceptance test levels during sine vibration tests for units for both in-plane and out of plane axes are given below:

Band	Qualification level (g)	acceptance level (g)
Hz	TBD	TBD
Hz	TBD	TBD
Duration	TBD	TBD

Table A2-2 Qualification and Acceptance Levels for Sine Vibration Tests

A2.3.4.3.3 Random Vibration Test Levels

Qualification levels during random vibration tests for units or assemblies interfacing with the S/C for each axis are defined as follows:

Band	Out of plane	unit
Hz	TBD	TBD
Hz	TBD	TBD
Duration	TBD	TBD
Band	In-plane	unit
Hz	TBD	TBD
Hz	TBD	TBD
Duration	TBD	TBD

Table A2-3 Qualification Levels for Random Vibration Tests

Acceptance levels shall be applied during 1 minute and shall be calculated using the formulabelow:

PSD Acceptance Level = PSD Qualification levels / 1.5625

A2.3.4.3.4 Acoustic Test Levels

The instrument units shall survive the acoustic levels shown in the table below.

Octave band centre frequency (Hz)	Qualification level (dB)	Acceptance level (dB)
31.5	128	124
63	135	131
125	137	133
250	139	135
500	137	133
1000	128	124
2000	124	120
4000	115	111
8000	109	105

Table A2-4 Acoustic Test Levels (TBC)

A2.3.4.3.5 Shock Test Levels

The instrument units shall be verified against the shock environment defined (TBC) in the Table below.

Table A2-5 Shock Response Spectrum (SRS)

Frequency [Hz]	Qualification SRS (Q=10) [g]
100	25
300	400
2000	1500
10000	1500

A2.3.4.4 Pressurized Items Test Requirements

1. The guidelines and requirements listed in ECSS-E-30-01a and ECSS-E-30-02 shall apply.

A2.3.4.5 MECHANISM TEST REQUIREMENTS

A2.3.4.5.1 Mechanisms Verification

1. The mechanisms verification test programme shall ensure that the hardware conforms to the design, construction and performance requirements as specified in the relevant applicable documents.

2. Tests shall be performed to check mechanisms performance in both launch and operational configurations.

3. Mechanisms can be considered as structures as far as strength and stiffness tests are concerned, and their design shall be verified against the same requirements as other structural components.

As a reference, the following tests' sequences are applicable:

- Functional tests (before and after thermal vacuum exposure)
- Mechanical environment tests
- Thermal vacuum functional test

A2.3.4.5.2 Mechanism Lifetime Tests

1. The lifetime of a mechanism shall be demonstrated by test in the appropriate environment, using the sum of the predicted nominal ground test cycles and the in-orbit operation cycles.

2. For the test demonstration, the number of predicted cycles shall be multiplied by the following factors:

Type/Number of Predicted Cycles

Ground Testing x4

• number of on-ground test cycles

(the minimum number to be used is 10)

In-orbit predicted cycles:

• 1 to 10 actuations x10

• 11 to 1,000 actuations x4

• 1001 to 100,000 actuations x2

• > 100,000 actuations x1.25

As actuation, a full output cycle or full revolution of the mechanism is defined.

3. In order to determine the lifetime to be demonstrated by test, an accumulation of actuations multiplied by their individual factors shall be used.

A2.3.4.6 THERMAL TESTS REQUIREMENTS

A2.3.4.6.1 Thermal Design Verification

1. The thermal design of a payload unit shall be verified by a dedicated thermal balance test according to the guidelines and requirements laid down in section 6.4.7.2.

2. The thermal balance test will consist of at least a hot and a cold steady-state and several transient phases that simulate boundary conditions experienced during the mission, including actual Sun exposure.

3. The validity of the unit design to meet its functional goals and to operate satisfactorily in vacuum in the temperature range expected during the mission shall be verified by a combined thermal vacuum and thermal cycling test.

4. The tests shall be designed on a case-by-case basis by the unit responsible and agreed with ESA.

5. The Acceptance Temperature Range shall be equal to the Design Temperature Range "+" or "-" an acceptance margin of 5 deg C.

6. The Qualification Te mperature Range shall be equal to the Acceptance Temperature Range "+" or "-" a qualification margin of 5 deg C.

For an ordinary electronic box, the thermal verification can be derived from the unit qualification test, if the unit is adequately internally equipped with thermal sensors and proper steady-state phases are included in the test.

7. Instrument specific thermal testing requirements at unit and system levels shall be defined by the PI.

A2.3.4.6.2 Test Methods

1. The equipment shall be mounted in a vacuum chamber in a thermally controlled environment.

2. Temperatures shall be controlled, measured and selected such that it can be guaranteed that the test item experiences actual temperatures equal to or beyond the minimum and maximum qualification/acceptance temperatures in the test environment.

3. The instrument shall be qualified using the type of fixations and mountings as designed in the instrument specification.

This is achieved by adopting one of the following test methods as appropriate.

Non Special Equipment, Internally Mounted.

4. The equipment shall be bolted to a mounting panel, using the correct bolts and bolt torques as specified in the equipment interface specification.

5. The mounting panel shall be black-painted (except for the mounting contact area) and have the following dimensions as a guideline:

- thickness representing standard platforms/sidewalls,
- length and breadth approximately equal at least to twice the nominal base dimensions of the equipment.

6. The mounting panel is temperature controlled.

7. During the test, the shroud and/or the panel temperatures shall be controlled to a fixed temperature to provide the spacecraft internal environment to give the qualification temperature level on the equipment itself.

8. The temperature reference point should be located at the outer surface of the instrument on its baseplate or near to its mounting feet. The number of reference points should be kept to a minimum - only one point whenever possible. A temperature sensor shall be located at the reference point, as an integral part of the equipment.

Special Equipment, Internally Mounted

Certain internally mounted equipment will require special test provisions. Examples of such equipment would be:

- sensors having viewing apertures seeing space and / or the planet
- highly dissipating, directly radiator cooled equipment.

9. In such cases, the required approach is to modify the test method given for internally mounted equipment, to the extent needed to give a reasonable representative test environment.

Equipment, Externally Mounted

Any instrument mounted outside the main spacecraft body will have special test requirements.

10. The test arrangement shall be designed to give the required qualification temperatures on the equipment, with approximately representative heat flows to and from the environment.

11. The following minimum test requirements shall be satisfied:

• Equipment shall be tested in a thermal vacuum environment, having a pressure of 0.0013 Pa (10-5 Torr) or less. The test may be commenced when the pressure falls below 0.013 Pa (10-4 Torr), and a pressure of 0.0013 Pa or less shall be achieved prior to start up of the units not operating during first ascent.

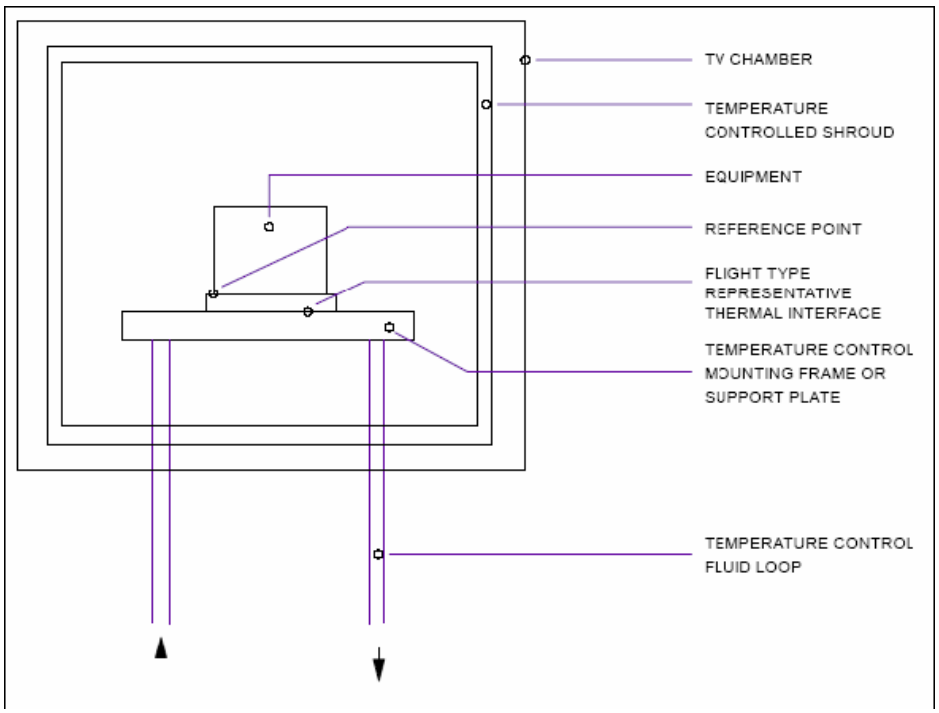

Figure A2 11 Equipment Thermal Vacuum Test Arrangement

A2.3.4.6.3 Temperatures and Cycles

1. The equipment shall be tested in the thermal vacuum test sequence, as shown in Figure A2 12.

The Temperature cycle begins with the initial functional test with the chamber at ambient temperature. At a pressure of 0.013 Pa, the temperature is increased first, for better outgassing, up to the high non-operating level (TNO-MAX). After a dwell time tE, the temperature is decreased to the hot start-up level (TSU-MAX), then the instrument switched ON and thereafter the temperature stabilized at the high operating temperature (TOP-MAX) during a time tE. After the time tE, the functional test is performed.

The equipment is switched off and the temperature is decreased and stabilized at the low non-operating minimum temperature (TNO-MIN) during the time tE. The temperature is increased to the cold start-up to switch the equipment ON. After stabilization at the low operating level (TOP- MIN), after a time tE, the functional test is performed. This constitutes one complete cycle.

Then at the high operating level after a time tE, the functional test is repeated, followed by a low operating level with a functional test after the time tE. This is the second cycle (without the hot and cold start-up and non-operating levels). The second cycle is repeated for the number of cycles required. The number of cycles, the temperature levels and rate of change and the dwell time are specified in Table A2-6.

The equilibrium temperature is reached when the temperature changes less than 1°C/hr.

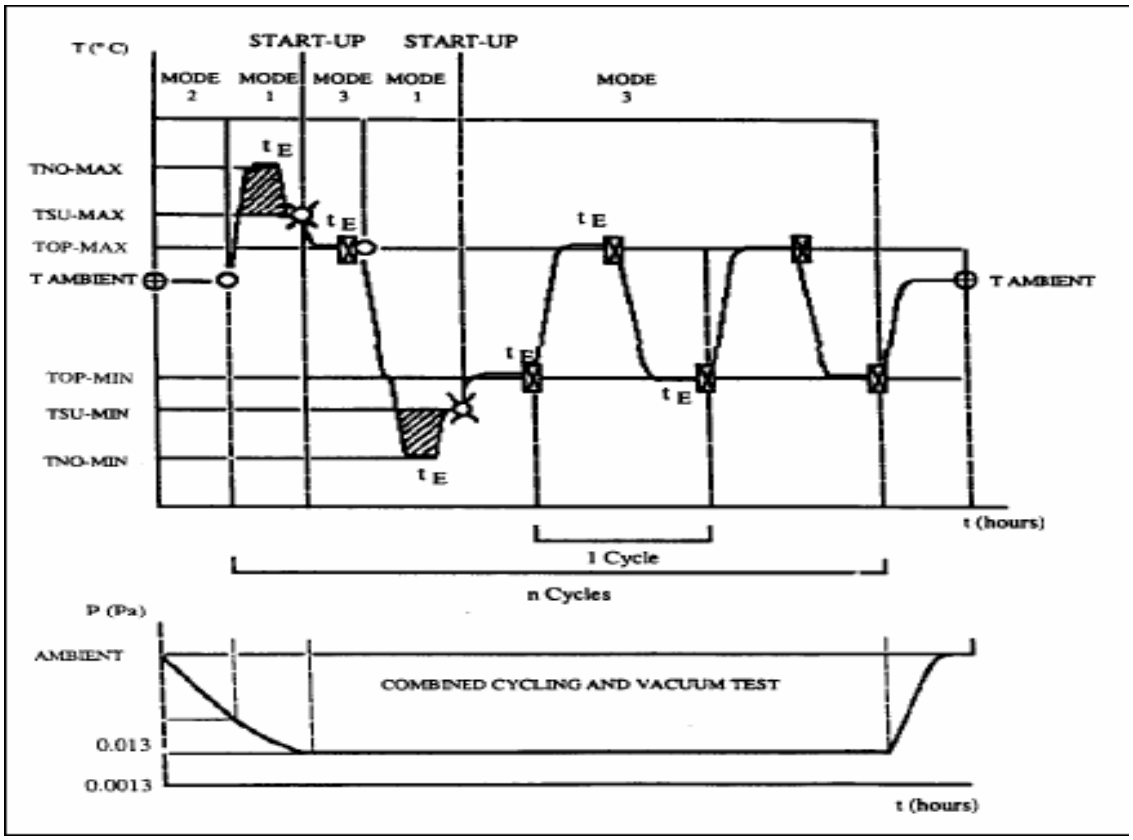

Figure A2 12 Equipment Thermal Cycling and Thermal Vacuum Combined Test Sequence

NOMENCLATURE TO Figure A2 12:

- T Temperature
- TNO-MAX Maximum Non-Operating Temperature (the highest design temperature the equipment has to survive not powered)

• TNO-MIN Minimum Non-Operating Temperature (the lowest design temperature the equipment has to survive not powered)

• TAMBIENT Ambient temperature

• TOP-MAX Maximum Operating temperature (the highest design temperature at which the equipment has to demonstrate full design ability)

• TOP-MIN Minimum Operating temperature (the lowest design temperature at which the equipment has to demonstrate full design ability)

• TSU-MAX Maximum Start-up Temperature (the highest design temperature of the equipment, at which the equipment may be switched on)

• TSU-MIN Minimum Start-up Temperature (the lowest design temperature of the equipment, at which the equipment may be switched on)

• P Pressure

• MODE 1 Functionally inert (test item not energized normally applicable to the non-operating condition).

• MODE 2 Partially functioning. Conditions as detailed in applicable design specifications, but normally applicable to conditions during launch.

• MODE 3 Fully functioning (test item fully energized and fully stimulated). Normally applicable to conditions during orbit.

• + Initial and Final Performance Test

• X Intermediate Reduced Performance Test

• tE Intermediate Equilibrium Temperature Time, dwell time

• 0 Switch-on (Start-up)

• 0 Switch-off

Temperatures	For qualification test the qualification temperatures shall be used. For acceptance test the acceptance temperatures shall be used
Temperature rate of change	dT/dt = 5 ... 20°C/min
Dwell time	$t_E \geq 2$ h
Stabilisation criterion	$\Delta T / dt \leq 1$°C/h
Number of cycles	n = 8 for qualification n = 4 for acceptance n = 4 for recertification

Table A2-6 Test Parameters Values

A2.3.5 Inspections

A2.3.5.1 VISUAL INSPECTION

1. Visual Inspections shall be performed at the beginning and end of acceptance and qualification testing.

2. The inspection shall include as a minimum:

- Completeness of hardware
- Identification of hardware
- Connectors
- Grounding Points
- Attachment Surfaces
- Thermal Surfaces (any visible changes)
- Inspection of transport conditions
- Inspection for damage
- Inspection of Interfaces
- Completeness of documentation

A2.3.5.2 PHYSICAL PROPERTIES

The purpose of physical properties measurements is to determine the equipment physical characteristics, i.e. dimensions, mass, centre of gravity and momentum of inertia.

1. The measurement of physical properties shall include:

- Mass
- CoG
- Momentum of Inertia

2. The following dimensions as a minimum shall be verified:

- interface dimensions
- envelope dimensions (including envelope of separate electronics box, filter, etc. if applicable)

A2.3.6 Calibration

1. The PI shall provide a calibration plan adapted to the scientific requirements and the overall development plan of the instrument and of the satellite.
2. The instrument shall be delivered fully calibrated.
3. Calibration activities at system level shall be only considered when scientifically justified, i.e. when for example the flight configuration is reached only after integration on the satellite. This type of activity is subject of agreement with ESA and its selected Prime.
4. The calibration plan shall be part of the Instrument Development Plan.

A2.3.7 Final Acceptance

A2.3.7.1 GENERAL REQUIREMENTS

1. The acceptance process shall demonstrate that the Instrument has been fully verified in terms of:

- scientific performances (including calibration and characterization)
- behaviour versus environmental conditions (including EMC)
- all functional interfaces

2. The acceptance of the Instrument shall follow the sequence hereafter:

- completion of acceptance tests, including calibration / characterization at the Instrument supplier premises, in order to verify that the Instrument together with its ground support equipment meet all interface specifications and that the Instrument is ready, for integration onto the satellite
- acceptance review of the tests results and of the completeness of the acceptance data package at instrument manager premises and release of a consent to ship if the acceptability is stated by the review board
- delivery to the satellite AIT site of the Instrument together with the ground support equipment (including test software and documentation) and the acceptance data package
- performance - by the Instrument supplier - of a post shipment inspection and at an incoming test at the AIT site
- after successful completion of the incoming verifications by the Principal Investigator and formal incoming inspection by system level QA, the Instrument will be released for integration onto the satellite
- notwithstanding the mandatory Instrument level tests, the Instrument software will only, be accepted after successful S/C level tests.

A2.3.7.2 ACCEPTANCE REVIEW

1. The acceptance review will check and ascertain the following topics:

- visual inspection and completeness of the hardware to he delivered
- compliance of the interfaces measurements (Spacecraft interfaces)
- availability of a complete set of functional performances data (using both the Limited Performances Test and Full Performances Test procedures)
- availability of calibration and characterization data
- ground support equipment relevant characteristics and documentation
- verification of the S/W configuration
- verification of the built standard
- completeness of the Acceptance Data Package

A2.4 Instrument and Spacecraft Integration

A2.4.1 Spacecraft-level AIV sequence

The spacecraft-level AIV sequence for the three configurations STM, AVM, and PFM is presented below.

STM

The STM AIV sequence is conducted according to Figure A2 13

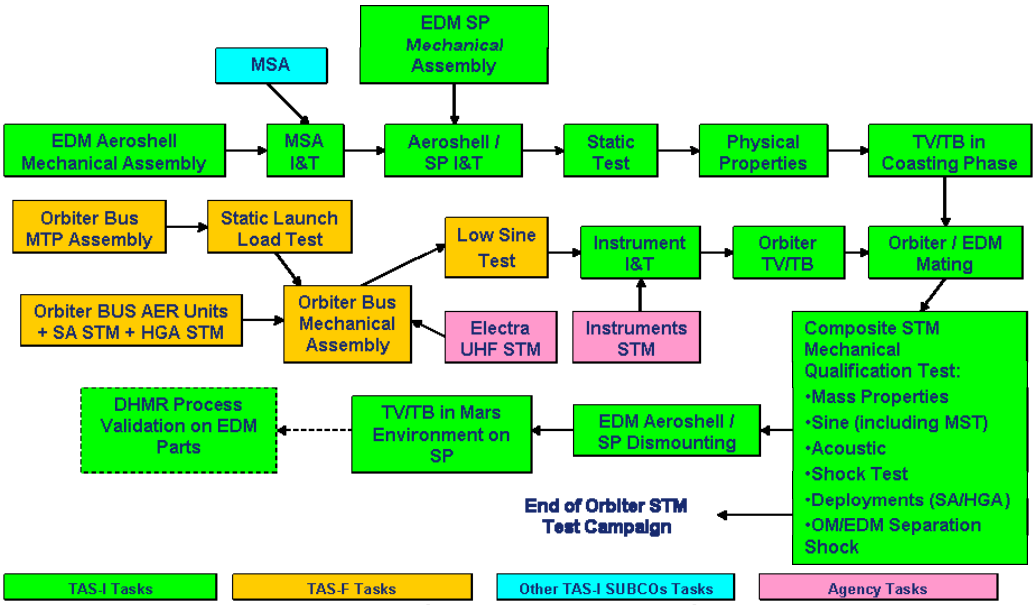

Figure A2 13 STM AIV Flow

Different colours address different responsibilities aspects:

- The MSA is provided by an industrial subcontractor
- The Orbiter bus fully integrated with STM units will be provided by TAS-F, also the test at Orbiter Bus level will be in charge of TAS-F (all included in orange box)
- The tasks under TAS-I (Prime) responsibility are reported in green
- In green/pink the activities are shown involving also the instruments which will be performed under TAS-I responsibility with agency/experimenters support for what concern the instrument aspects.

As shown above the Instruments STM will be integrated in the TAS-I premises on the Orbiter bus delivered from TAS-F. The resulting Orbiter STM will be instrumented, transported to an environmental test facility and subjected to a Thermal Balance qualification test.

After that the Orbiter will be integrated with the Entry Descent and Landing demonstrator and subjected to the mechanical qualification test campaign.

AVM

The AVM AIV sequence is shown in Figure A2 14

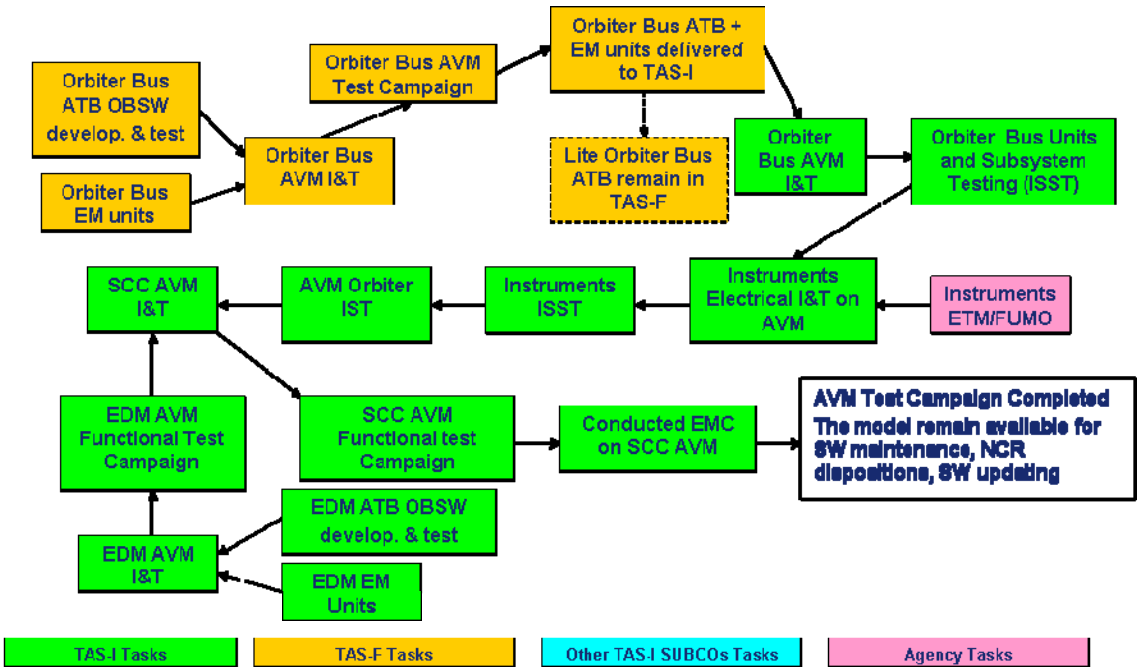

Figure A2 14 ATB/AVM AIV Flow

The same colour codes as described for STM are applicable.

The Instruments EM will be electrically integrated on AVM in TAS-I premises, after that the Instruments will be functionally verified checking their capability to exchange data with the Orbiter Bus, receive commands, generate telemetry.

Successively the instruments will be involved in the Integrated System Test in which mission phases and also some failure cases will be verified in a simulated environment.

After the integration of the EDL Demo Avionics Test Bench the resulting SCC AVM will be subjected to a test campaign in an environment simulating the launch and cruise phase. In this phase the Instrument involvement will be mainly related to the simulation of events foreseen on them during the cruise (like periodic checkouts).

After that the AVM will be used to perform the conducted EMC test, where the instruments will be put in a representative mode to simulate the real Orbiter electro-magnetic environment during the operative phases.

PFM

The preliminary PFM AIV sequence is shown in Figure A2 15

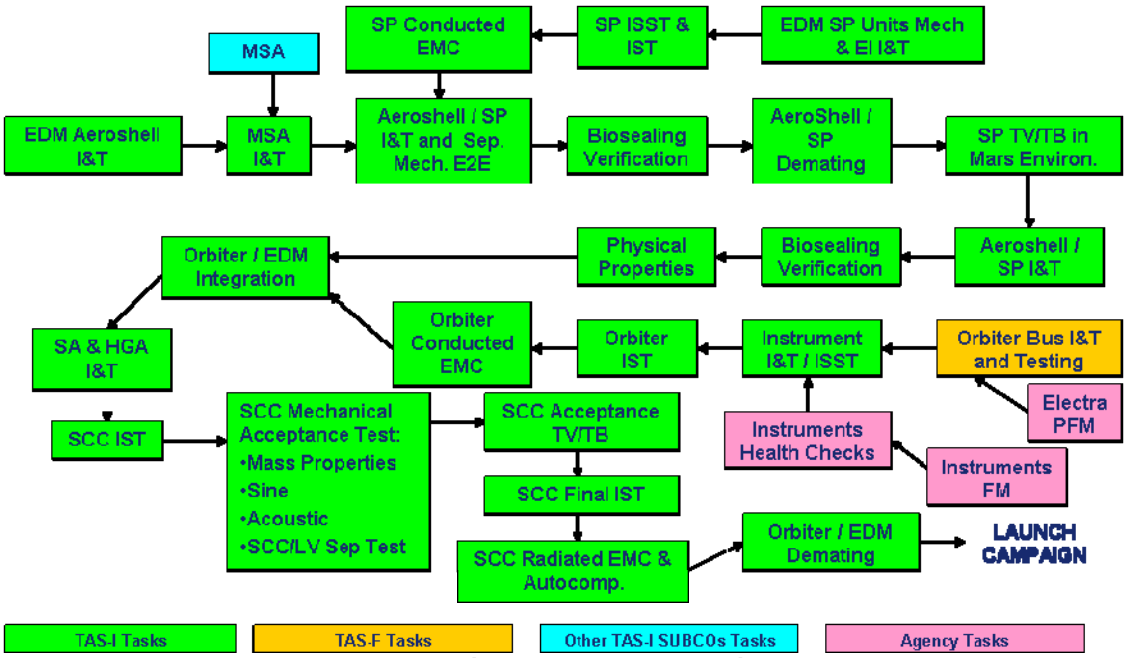

Figure A2 15 PFM AIV Flow

The same colour codes as described for STM are applicable.

As shown above the Instruments Flight Models will be integrated in the TAS-I premises on the Orbiter bus delivered from TAS-F, after that the Instruments will be functionally verified checking their capability to exchange data with the Orbiter Bus, receive commands, generate telemetry.

Successively the instruments will be involved in the Integrated System Test in which mission phases and also some failure cases will be verified in a simulated environment (shall be a representative subset of test cases debugged and executed on AVM). After that the Orbiter will be subjected to Conducted EMC testing and shipped to the mechanical test facility.

In the test facility the Satellite configuration will be completed integrating EDL Demo, Solar Array and High Gain Antenna. The Spacecraft Composite (SCC) will be subjected to a Mechanical Acceptance Test campaign and a Thermal Vacuum/ Thermal Balance test, with Integrated System Test performed before and after the environmental testing.

Furthermore the SCC will be subjected to a radiated EMC test in an anechoic chamber and finally delivered for the launch campaign.

A2.4.2 Instrument and Spacecraft Integration

The Integration between Instruments and Spacecraft will be purely mechanical on the STM, and mechanical and electrical on AVM and spacecraft PFM.

A typical integration flow on AVM and spacecraft PFM will include:

a) Instrument health check before starting integration activity, using equipment provided by instrument developer.

b) Mechanical Unit Integration including integration of additional HW like thermal filler (if any), thermocouples, heaters etc

c) Connection of unit bonding strap and measurement of grounding

d) Power input to unit measurements: first in unloaded condition (only input, unit electrically disconnected), after that in loaded condition

e) Unit switch on and measurements of inrush current and power consumption

f) Electrical integration of the Telemetry and Telecommand lines, with the following objectives:

- Interface verification in accordance with the electrical design and interface requirements.
- Correct allocation of all relevant Telemetry and Command tags within the EGSE monitoring & control "housekeeping" data base
- Verification that the system database is correctly filled with the Spacecraft commands and telemetry data: checking that the commands are addressed in the correct way and the telemetry is correctly decoded.

g) Verification of the electrical characteristics of special I/F not included in the previous cases

A2.5 Instrument and Spacecraft Testing and Verification

After the integration the Instruments will be involved in the system testing activities.

On STM the instruments are substantially passive, representative only form a thermal and structural point of view.

On AVM and PFM each instrument after integration will be subjected to an Instrument -SFT and Instrument-IST.

The Instrument-SFTs will be used repetitively to verify nominal functioning of the instruments after environmental tests or other major AIV milestones.

During the IST the Instruments will be exercised in operative configurations together with the rest of the spacecraft (GNC, power, etc), in order to simulate the real mission phases. Main purposes of the Instrument-IST will be:

- Correct management of exchange of TC- and TM data between Instrument electronics and Orbiter Bus
- Verification of Instrument operational modes for all mission phases
- (Simulated) Science data acquisition, as adequate or feasible during the AVM- or PFM-test configuration.
- Verification of Storage Capabilities of scientific data
- Specific Instrument performance test that have to be done at spacecraft-PFM level (if any)

The instruments will be switched off during the mechanical tests (sine, acoustic, separation) since this is the launch configuration.

On the contrary the instruments will be active during the EMC testing and during the TB/TV-test.

During the launch campaign it is foreseen to repeat the Integrated System Test after transportation to the launch site plus health checks before final SCC mating on the launcher.

A3 OPERATIONAL REQUIREMENTS

A3.1 Ground Segment Description

A3.1.1 Mission Operations

A3.1.1.1 Basic Principles

A3.1.1.1.1 General

1. Operations for both, spacecraft and scientific payload, will only be conducted in strict compliance with validated event sequences and procedures documented in the Flight Operations Plan. This encompasses all operations i.e. special operations and contingency operations as well as routine operations during the different mission operation phases.

2. Each Instrument shall provide all necessary inputs for preparation of nominal and contingency Flight Operation procedures.

3. The MOC will switch-off any instrument which is deemed to be interfering with or endangering the mission objectives, using agreed and validated contingency procedures.

4. Science TM packets will not be processed at MOC, so all information relevant to the health and safety of the payload and in general required for engineering activities on the instrument (monitoring and control, troubleshooting, software maintenance, etc.) shall be contained in non-science TM packets and comply to CCSDS packetization standards (ref sect 4.5.2.3 Ground Data System Constraints).

A3.1.1.1.2 Off-Line Operations

1. Due to the one-way propagation delay of up to 22 minutes (maximum Earth distance of 2.65 AU), the spacecraft will be mainly controlled via off-line operations. After the initial spacecraft commissioning, all telecommands required to carry out the mission will normally be loaded in advance on the Mission Timeline for later execution. All telemetry generated on-board will be stored for later retrieval by ground.

2. Telemetry evaluation will also be mainly off-line, with limited possibility of quasi real-time intervention in selected critical phases and in major contingency cases.

3. Anomalies will only be detected by MOC with a delay, corresponding at least to the light travel time, but typically rather of the order of one day in the case of daily passes, and two to four days in the case of cruise when 3 passes per week are planned. Reaction to on-board failures from the MOC within these typical reaction times will require unambiguous identification of the failure in telemetry, and the related contingency procedures being contained in the instrument user manual (and translated in the FOP).

4. The PI teams shall support the investigation and resolution of Instrument-related anomalies in-flight. This may include provision of technical consultancy, and presence of PI team technical experts at ESOC if required.

A3.1.1.2 In Flight Thermal Characterization

1. Due to the difficulty to accurately predict the thermal behaviour of a spacecraft in all possible conditions during spacecraft AIV/T, a thermal characterization campaign will be performed after arrival at the Mars orbit, with the aim to define the operational thermal envelope of the spacecraft.

2. No on-line thermal modelling will be utilized in any phase of the mission. In the Mars orbit a stable baseline plan is required and short term mission redefinitions based on updated thermal constraints are not affordable.

3. The entire operations planning for the science orbit will be produced on the basis of a robust, conservative but realistic set of spacecraft operations constraints that will ensure safe thermal operations during the observation windows.

A3.1.1.3 Solar Conjunction Operations

1. The nominal RF link to-/from- the spacecraft will be degraded when the Sun-Spacecraft-Earth angle becomes lower than 5 degrees (based on X-band experience). Consequently the tracking measurements are less accurate and the up- and downlink bit rates will be reduced.
2. The spacecraft shall be able to operate autonomously during the solar conjunctions, but it shall not be able to continue mission product generation continuously, as this would have driven the size of major onboard resources such as the Mission Timeline and the Mass Memory. Therefore, science operations in this period shall have to be adjusted to the available on-board resources.

A3.1.1.4 Reporting

1. The MOC shall regularly report on the mission and spacecraft status with a frequency depending on the criticality of the mission operation:
    a. LEOP: Operations reports will be issued daily.
    b. Critical event: Operations report will be issued ad-hoc.

c. Routine phases: Operations reports will be issued weekly to monthly depending on the level of activity. Contents and distribution lists of these reports will be agreed with the Mission Manager.

2. Anomalies shall be reported within one working day from their detection by MOC to the Mission Manager, the Flight Operations Director, Industry (if still providing support to the mission). In case of anomalies affecting the payload, the Project Scientist, SOC, and affected PI will be added to the distribution list.

3. The PI teams shall issue instrument operations reports after each activity during non-science in-flight phase, i.e. one for the Commissioning phase, and one for the check-out during cruise.

A3.1.1.5 Payload Operations Support

ExoMars Orbiter payload operations will be governed by the rules and guidelines established and periodically discussed by the Science Working Team (SWT). The preparation, coordination and execution of science operations will be carried out differently in the various phases of the mission.

A3.1.1.6 Near Earth Commissioning Operations

Payload operations during the Near-Earth Commissioning Phase are conducted in a near-real time manner, to support the critical post-launch initial activation and checkout activities, and taking advantage of the relatively short distance to Earth.

1. During Payload commissioning Near-Earth, all experiment operations shall be executed at the MOC using a detailed phase timeline and related procedures established before to the start of the phase. Timelines and procedures will be defined and documented in the Payload Flight User Manuals by the experiment teams, produced by the ESOC Flight Control Team, reviewed and agreed by the PIs. After validation via the system simulator and/or during System Validation Tests (SVTs), they shall be included in the Flight Operations Plan.

2. In the Near-Earth Commissioning Phase it will be possible for the experiments' teams to submit change requests to procedures and/or timelines until very close to the execution time. These requests shall be discussed with the Flight Control Team in daily operations review meetings under the supervision of the Project Scientist and the Spacecraft Operations Manager.

3. A Principal Investigator Support Area (PISA) shall be provided at ESOC to accommodate PI provided EGSE to be used during Near-Earth Commissioning Phase,

when critical payload operations will be conducted that might require near-real time interaction between the Flight Control Team and the Instrument Team for decision making.

4. The PISA shall enable data access and commanding capabilities, as well as communication with remote locations. At the PISA an interface with the DDS (identical to the remote interface) will be available to support both the telemetry delivery services to the experiment EGSE and special command requests from PIs to the MOC.

5. In this phase the presence of PI team experts and installation of instrument EGSE equipment at the MOC shall be required to monitor the operations execution in near-real time (compatible with the availability of data at the MOC) and to support GO/NOGO decisions at predefined steps in the procedures.

6.

A3.1.1.7 Cruise Operations

During cruise mainly navigation operations are performed and in principal no payload operations. However, one non-interactive payload checkout can be performed offline via the SOC interface in a dedicated checkout slot.

1. The SOC shall be responsible for planning the payload checkout, while MOC remains responsible for the overall mission planning and mission operations.

2. The PI teams shall submit their operations requests to the ExoMars Orbiter SOC, who will coordinate and prepare the necessary science plans in order to deliver to MOC the list of needed payload operations requests (PORs). The MOC shall process and merge the operations requests into a timeline to be uplinked to the spacecraft.

3. All activities in this phase shall be carried out off-line, according to the planning and deadlines established in the mission planning concept. The final instruments' checkout timeline generated at the MOC will be checked against the mission rules and constraints and the available spacecraft environmental resources, iterated if necessary with the SOC/PI and finally implemented in the mission timeline to be uplinked to the spacecraft.

A3.1.1.8 Science Operations

Once the spacecraft has reached it's final science orbit, after the aerobraking phase the mission will enter in a science phase, in which all instruments on board the spacecraft will perform scientific measurements.

1. The SOC shall be responsible for planning all payload operations, while MOC remains responsible for the overall mission planning and mission operations.

2. The SOC shall be responsible for submitting consolidated payload operations requests files to the MOC at the level of command sequences. It is the responsibility of the MOC to convert the submitted operations requests into commands and to ensure timely uplink to the spacecraft for execution. The interface between MOC and SOC will include a list of command sequences authorized for scheduling by the SOC.

3. All activities in this phase shall be carried out off-line according to the planning periods and deadlines established in the mission planning concept. The inputs from the SOC will be checked by the Flight Control Team at the MOC against the mission rules and constraints and the available spacecraft and environmental resources, iterated if necessary with the SOC/PI and finally implemented in the mission timeline to be uplinked to the spacecraft.

A3.1.1.9 Payload On-Board Software Maintenance

1. Responsibility for maintaining the instrument on-board software shall remain with the PI team throughout the mission.

2. ESOC shall provide the facilities and services required to safely uplink and install onto the instrument during flight the required software modifications, as developed by the PI team and delivered through an agreed interface and format.

3. The on-board software maintenance support service provided by ESA/ESOC for the ExoMars Orbiter shall therefore be as follows:
    a. Pre-launch, the PI team provides in the user Manual a generic software maintenance procedure, which contains the detailed steps to configure the instrument in its maintenance mode and the constraints related to any in-flight software maintenance activity.
    b. In flight, when an instrument software change is required, the PI team will develop, check and validate at instrument level the required change.

4. The PI team shall then submit memory maintenance requests in form of text files in an agreed format. Such requests include Memory Patch Requests, Memory Dump Requests, Memory Check Request. As part of the request, the PI team indicates a time window where the memory maintenance request has to be executed.

5. ESOC shall be responsible for converting the text files input into Memory Maintenance commands (Service 6). These commands are uplinked to the mass memory as a TC file for delayed execution.

6. ESOC shall be responsible for scheduling and executing the maintenance activity. Instrument pre- and post-maintenance operations are executed as specified in the instrument User Manual, normally from the Mission Timeline, unless requested otherwise by the PI. When the instrument is ready to receive the maintenance commands, the execution of the corresponding TC file is started and the on-board system issues the maintenance commands to the instrument.

7. The PI shall be responsible for the verification of correct loading of the experiment software updates, since science telemetry processing is not performed at ESOC.

8. If requested by the PI, telemetry generated by the maintenance commands (dump / check) can be compared by ESOC against the contents expected by the PI. These telemetry packets shall also be available to the PI via the DDS.

9. Changes affecting the functioning of the operation of experiments shall be implemented only with explicit approval of both, the ESA Mission Manager and the ESA Spacecraft Operations Manager (SOM). In addition, before the implementation of software changes, any effects related to the ESOC ground software shall be determined and, if required, modifications shall be initiated by the SOM.

10. Though the responsibility for experiment on-board software validation is with the respective principal investigator (PI), system-level operational validation of instrument software updates shall be supported by ESOC upon PI request provided a representative instrument model is mounted on the Engineering Test Bed (ETB), if available, to support the activity.

A3.1.1.10 Mission Planning

ExoMars Orbiter payload operations will be governed by the rules and guidelines established and periodically discussed by the SWT. While in the Commissioning Verification Phase and for special engineering activities like contingency recovery, anomaly troubleshooting and on-board software maintenance operations are executed following dedicated procedures and timelines defined in the FOP, for all other mission phases, the preparation, coordination and execution of instrument operations will be carried out via an automated cyclic mission planning and execution approach, as described below:

1. The Mission Planning approach for the routine science and data relay operations phases shall be built on the experience of the precursor planetary missions Mars

Express and Venus Express. The development approach is based on a common system to support BepiColombo, Rosetta (comet phases), Solar Orbiter and ExoMars.

2. In a typical Mission Planning scenario the PI teams shall provide, at fixed deadlines and with a fixed periodicity, inputs to the SOC for the requested science operations, the SOC passes a consolidated request to the MOC which checks the requests against mission, environmental and resource constraints.

3. The planning concept is traditionally based on an iterative process during which operations are iteratively refined and the required level of checking is performed. The planning concept shall allow to pre-plan instrument and spacecraft operations evolving from coarse to more detailed planning while being able to freeze spacecraft resources, like pointing, as early as possible, to give MOC enough time to evaluate the requests at plan level and resolve conflicts if needed.

4. For the routine science and data relay operations phase the timeline of spacecraft attitude and the season (eclipses, occultations, Earth distance, etc.) will play a major role in establishing the constraints scenario against which the payload operations plan shall have to be checked. This means that the Mission Planning System shall utilize information coming from the Flight Dynamics System defining the evolution of the S/C orbit and attitude and the epoch (like event file, pointing timeline, etc).

5. The set of constraints applicable to the payload operations indicates that a baseline science plan, which already takes into account the major constraints (like conjunctions etc), shall have to be established long before submitting the final science operations requests to the Mission Planning for release to the front-end Mission Control System.

6. The mission planning scenario for the routine science operations phase shall be divided into different levels:
    a. *long term planning* shall deal with the establishment of the baseline science plans; in this cycle there will be an input from the SWT and SOC to the MOC to define the operations timeline based on the scientific objectives to be achieved; typically one long term plan will be defined for each major payload operations phase of the mission (e.g. one for cruise science and one for the routine science phase), and the final iteration shall take place around 6 to 12 months in advance of the actual operations of each phase. Output of this cycle is a high level payload operations plan (priorities assigned and conflicts considered across instruments) and a finalized ground stations coverage for the entire phase
    b. *medium term planning* shall deal with the definition and refinement of an attitude strategy for the next planning cycle (typically of the duration of one month). The baseline plan shall be translated into an attitude timeline (by Flight Dynamics) and P/L command requests (by SOC) thus allowing the MOC to

allocate resources and identify eventual conflicts on instruments operations; output of this cycle is a finalized attitude and resource consumption profile.

c. *short term planning* shall work on shorter planning cycles. The MOC, basing on the refined final command requests checked against rules in the Mission Planning System, will freeze resources and produce the sequences of commands to be up linked to the spacecraft, plus the related operation schedule inputs for the ground stations. Deadlines for submission of requests in this phase shall be in the order of one week before the event. The planning period shall also be in the order of a week. In this cycle, detailed pass instructions are also prepared for the on-console personnel.

7. A set of routine mission operational rules and constraints shall be identified by the Flight Control Team based on the spacecraft and payload user manuals as laid down by the manufacturer/instrument teams. These rules and constraints will drive the checks and modelling used during the planning process to validate a particular plan of operations.

A3.2 Mission Products

Mission products will be made available to the SOC and to the ExoMars Orbiter PIs in parallel, and will include all spacecraft and experiment raw telemetry data plus auxiliary data as defined in this section.

A3.2.1 Telemetry Processing at MOC

A3.2.1.1 Generic

1. All telemetry packets received at the MOC shall be stored as raw data and made available to all mission users. Upon delivery of raw data to external users, additional information such as quality data and packet timing are provided to enable the users to time correlate the data with UTC.

2. Decompression of data compressed by the instrument itself is not supported by ESOC. These packets shall be delivered as received by the on-board data handling system.
3. Non-science telemetry packets shall be further processed by ESOC in near real time for spacecraft control and monitoring purposes. In particular telemetry parameters shall be extracted from packets, and can be calibrated, displayed and checked against predefined limits. A subset of telemetry packets shall be systematically processed for command verification, performance assessment, trouble shooting and on-board software maintenance as required.
4. ESOC shall not perform any processing of science telemetry packets beyond archiving, neither for calibration nor for instrument monitoring purposes. For this reason, it is essential that any information required at ESOC for health and safety monitoring is

included in the instrument non-science telemetry and that the telemetry structures are compliant to the CCSDS Packet Standards and the ESA Packet Utilization Standard (PUS).

5. Information to drive the processing of payload non-science data shall be provided in the Instrument user manual and database.

A3.2.1.2 Auxiliary Data

1. Auxiliary data are non-telemetry data required to support mission planning and science data analysis. They shall be stored and made available to external users in the same way as telemetry data, and will be correlated with UTC. It is foreseen to typically include:
    a. Spacecraft ephemeris with respect to Sun, Earth and Mars.
    b. Spacecraft attitude prediction/reconstitution.
    c. Event files.
    d. Command history data.
    e. Time relation history (OBT/UTC).
    f. Mission planning information.

2. Auxiliary data shall be provided in a format and within coordinate systems to be jointly defined between ESA and the PIs through the relevant SWT.

A3.2.1.3 Data Disposition System

1. The MOC system that provides access to the mission telemetry and auxiliary data described above shall be called Data Disposition System (DDS).
2. The DDS shall allow the authorized user to:
    a. Request a catalogues of available TM packets (per APID and time range of generation and/or reception on ground).
    b. Request a set of TM packets per APID and time range (only for those APIDs for which he is authorised to submit request).
    c. Request a specific file in the set of available auxiliary information files
    d. Specify off-line to ESOC that selected auxiliary information files are automatically transmitted to the user's institute when a new version becomes available in the archive.
3. The DDS is meant to be used as a temporary repository of fresh telemetry and auxiliary information, which must be requested as soon as possible by the relevant user and transferred to the user's private archive. In order to avoid unnecessary overload of the DDS, the users will be discouraged from using the DDS as a remote archive, thereby requesting repetitively the same data more than once. To this aim data transfer quotas per user shall be introduced and possibly a limit of availability of past data shall be defined (typically the last 2 weeks of data will be retrievable at any time). This interface shall be governed by the Data Disposition Interface Document (DDID).

A3.2.1.4 Long Term Raw Data Archiving

1. Raw telemetry and auxiliary data shall be kept by MOC throughout all post launch mission phases on the Long Term Archive (LTA). This archive shall be accessible remotely via the DDS throughout the mission, up to the end of the rundown phase (typically 3 to 6 months after end of the science mission). MOC shall ensure completeness and integrity of the LTA during its active lifetime through back-up tapes.

2. There shall be no delivery of data on Raw Data Media during or after the mission.

3. Processed scientific and auxiliary data shall be archived by the SOC according to the ExoMars Orbiter Archive Plan.

A3.2.1.5 Delivery Formats

1. Each data delivery request to the DDS shall result in a transfer of a block of data containing three main areas:
    a. An acknowledgment, including request details and status.
    b. A catalogue entry giving identification details of the requested data actually supplied (e.g. experiment, date, time).
    c. The requested data itself.
2. A simple packaging within Standard Formatted Data Units (SFDUs) shall be applied, following a recommendation of the Consultative Committee for Space Data Systems (CCSDS). Apart from providing a convenient mechanism for handling the variable length of requested data, this standard shall also provide administrative support for description of application data. Both the formatting of data delivered through the DDS and for data long term archiving.

A3.2.1.6 Command Request Handling

In addition to the data access capability, the DDS allows for transfer of consolidated command requests to the MOC as inputs to the mission planning system. The MOC will support approval, authentication and authorisation of command requests. After validation the MOC will incorporate the command requests into the mission planning system, which generates the final command schedule for uplink to the spacecraft. This interface will be governed by the Planning File ICD (PF ICD).

A3.3 Testing, Training and Simulation

A3.3.1 General

The ground system test and validation activities begin around 2 years before launch. Activities will be mostly performed as part of the ESOC ground segment Satellite Interface Tests (SIT) and System Operations Validation (SOV) programme, and will include tests involving the payload as described in the following sections.

A3.3.2 Satellite Interface Tests

The purpose of the Satellite Interface Tests (SITs) is to test and validate the external interfaces to the satellite and the basic TM and TC database definition. They are performed with the actual satellite linked to the MOC via a communications network for TM, TC and voice connections. The MOC mission control software will be validated as far as possible early in the programme, with the aid of a dedicated spacecraft software simulator. The PI shall support the satellite interface tests outlined below through preparation of related inputs, review of test plans and procedures, and if required, through actual participation in the tests itself.

A3.3.2.1 Mission Sequence Test

1. To verify the spacecrafts capability to perform selected mission scenarios a set of Mission Sequence Tests (MST) will be performed as part of the Satellite Interface Tests. Mission scenarios for the full science phase, in particular during the dedicated observation windows shall be prepared.
2. Each MST scenario covering representative spacecraft and payload operations for a typical mission slice, time-tag command sequences shall be defined for the payload and the spacecraft subsystems, loaded on-board and executed in conjunction with typical ground station passes activities. The MST should be performed as soon as possible in the overall project schedule, <u>as part of the spacecraft/payload functional tests, and/or be conducted during integrated satellite tests in the thermal vacuum under the responsibility of the project.</u> The MST shall consist of a number of tests of approximately one day each and accumulated overall duration of TBD days.
3. PI teams support for MST is TBD.

A3.3.2.2 System Validation Tests

1. The Project shall provide for on-line access to the ExoMars Orbiter Flight Model for closed loop testing (System Validation Test) with the ground segment and the flight control software. The SVTs will comprise:
    a. Spacecraft commanding from the MOC

b. Telemetry flow between satellite and MOC. Real time non-science TM data processing in the MOC in parallel to the TM processing in the check-out equipment.

2. A series of SVTs shall be performed with the satellite, starting at around L-18 months. Typically SVT0, SVT1 and SVT2 slots will be scheduled and executed in this period. SVT0 (2 days) shall mainly acquire satellite telemetry to verify databases and to perform some basic commanding; SVT1 (10 days) emphasises "software" validation activities which include all mission control software facilities and databases. SVT2 (5 days) is intended for re-validation of outstanding software facilities as well as for exercising and validating FOP sequences with the actual spacecraft.
3. The PI teams shall provide support to SVTs as follows:
   a. Provide test procedure inputs.
   b. Review/approve procedures defined by the MOC.
   c. Provide real-time support at test site and/or in ESOC during SVT execution.
   d. Evaluate test results.
   e. Support anomaly investigation and resolution.

A3.3.2.3 System Validation Test (SVT) Data Flow

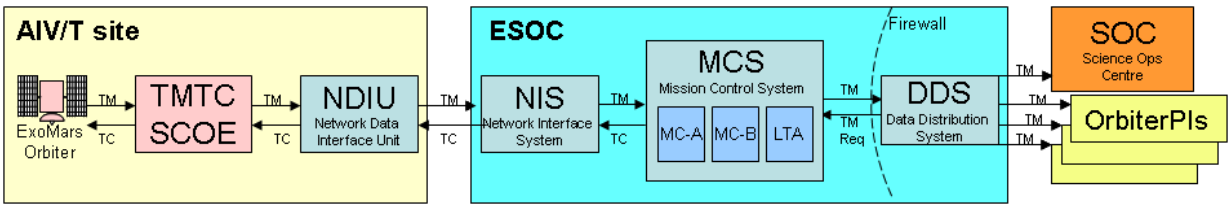

The command and telemetry system used for SVTs will be identical with the systems used in flight except that the ground station equipment will be replaced by a representative Network Data Interface Unit (NDIU) which interfaces with the TM/TC SCOE used at the AIV site for telemetry monitoring and commanding. The telemetry format and command format will be identical to the formats used in flight. During System Validation Tests, commanding will be performed according to Flight Operations Procedures to validate spacecraft and payload command sequences. The commanding interface from PI and JPL SOC via the MOC Mission Planning (MPS) is not foreseen at this stage.
During system tests, telemetry data will flow back from the AIV/T site to MOC ground data system, and the PI and SOC will be able to access the payload data either locally via the AIV system or remotely via the MOC Data Disposition System.

A3.3.3 System Operations Validation (SOV)

1. The System Operations Validation (SOV) programme aims to execute a series of end-to-end operational scenarios to verify readiness of the ground segment as a whole to support the mission. As such, a number of standard and mission unique test are executed. It should be noted that some of the test involving the end-to-end science operations systems

will be differed to the post launch phases. Details about the overall system testing activities shall be defined in the Ground Segment System Test Plan.

2. For all SOVs defined below, the PI teams shall provide support for procedure definition, procedure approval, results analysis and anomaly investigation/resolution.

A3.3.3.1 Data Disposition System (DDS) Interface Tests

1. At around L-10 months the DDS interface to the remote PIs and SOC shall be tested to demonstrate compatibility in terms of physical/logical connectivity and application interfaces (file request/transfer mechanism, command request capability). This test may be performed applying an operational scenario with multiple users, and may include measurements of the turn around times.
2. Note that the DDS interfaces shall have to be tested both in remote configuration and with the payload support systems installed at the MOC in the configuration required for critical operations.

A3.3.3.2 MOC/SOC End-to-End Test

1. The objective of the MOC/SOC Interface test is to verify the interface functions and procedures required to generate a consolidated operation request schedule, ready for subsequent up-link to the spacecraft. Furthermore, all operational interfaces defined in the PF ICD and in the Science Operations Implementation Agreement (SOIA) shall be exercised.
2. This test shall be performed not later than 6 months prior to launch. Furthermore, the cruise after CVP phase shall be used as SOC commissioning.

A3.3.4 Simulations Campaign

Pre-launch operations support shall start approximately 6 months before the launch. During this period the MOC at ESOC performs its final simulation programme including the validation of the Flight Operations Plan (FOP) and the mission control system. Principal Investigators with experiment specialist participation is required for the simulations related to the first experiment switch on and other critical operations (CVP simulations).

A3.4 Instrument Documentation and Data Inputs

A3.4.1 Documentation

1. The experiment shall be operated and controlled in-flight according to the requirements defined in a set of documents. These will be mainly the documents which shall be used to prepare the ESOC Flight Operations Plan (FOP), which governs all flight operations. These documents are:
    a. Instrument On-board Software ICD

This document is the formal ICD between the instrument software and the on-board software. It is an essential input to operations since it describes in detail the services provided by the on-board central software to the instrument, including operationally relevant aspects like data transfer and autonomy functions.

b. Instrument User Manual

This document shall contain:

- Detailed description of the instrument
- Operational constraints related to all instrument operations (including constraints on spacecraft activities affecting the instrument)
- Systematic description of all operations required to conduct its flight operations (including periodic maintenance activities, operational modes and transitions).
- Operational procedures required to perform all nominal and contingency activities
- Requirements for health and safety telemetry monitoring at the MOC and the relevant recovery actions where applicable
- Requirements for trend analysis and overall performance monitoring where applicable.

2. The PI teams shall review/approve the FOP for the aspect/sections relevant to Instrument operations.

A3.4.2 Instrument Database

1. A single, Project-wide spacecraft TM/TC database shall be specified, using the structure and detailed definition of the SCOS-2000 MIB (Mission Information Base) compliant to SCOS-2000 Database ICD, EGOS-MCS-S2K-ICD-0001. This shall ensure compatibility of the spacecraft database required by the multi-mission control system which is part of the ESOC infrastructure.
2. The ESOC operations team shall be formally part of the review and approval process for all change requests produced on the MIB during the pre-launch population and maintenance phase.

3. ESOC shall contribute to the population work pre-launch with direct inputs in areas agreed with the Project, such as payload TM/TC, displays, etc.
4. Responsibility for database maintenance shall be transferred to ESOC at the Flight Acceptance Review.

5. An Instrument Data Base (IDB) shall be established, maintained and delivered by the Instrument PI to the Project to become part of the MIB. The IDB shall contain a complete definition of telemetry and telecommand data required for the detailed design of the flight control software, for the design of the software simulator and for setting up the operational telemetry and telecommand data files. The IDB shall comply to the Database Definition Document (DBDD), and shall be delivered according to TBD schedule.
6. Delivery format is TBD.

A4 GLOSSARY

A4.1 Acronyms and Abbreviations

Abbreviation	Meaning
AIT	Assembly, Integration and Test
AIV	Assembly, Integration and Verification
AL	Acceptance Load
AO	Announcement of Opportunity
ASOM	Aerobraking step-out manoeuvre
ATB	Avionics Test Bench
AVM	Avionics Model
BOL	Beginning of Life
C&CC	Cleanliness and Contamination Control (also CCC)
CAD	Computer Aided Design
CCSDS	Consultative Committee for Space Data Systems
CDR	Critical Design Review
CIDL	Configuration Item Data List
CPU	Central Processing Unit
CRP	Contingency Recovery Procedure
CTR	Central Time Reference
CTU	Central Terminal Unit
CVCM	Collected Volatile Condensable Material
DC	Direct Current
DDOR	Delta Differential One-way Ranging
DDS	Data Disposition System
DGMM	Detailed Geometrical Mathematical Model
DHS	Data Handling System
DLL	Design Limit Load
DOR	Direct Operations Request
DRD	Data Requirements Descriptions
DSN	Deep Space Network (NASA)
DSPG	Distributed Single Point Grounding
DTMM	Detailed Thermal Mathematical Model
DUL	Design Ultimate Load
ECSS	European Cooperation for Space Standardisation
EDL	Entry, Descent and Landing
EDM	EDL Demonstrator Module
EED	Electro-Explosive Device
EEE	Electronic, Electrical and Electro-mechanical
EGSE	Electrical Ground Support Equipment
E-ICD	Experiment Interface Control Document
EIDP	End Item Data Package
EIP	Experiment Implementation Plan
E-IRD	Experiment Interface Requirements Document
EMC	Electromagnetic Compatibility

Abbreviation	Meaning
EMI	Electromagnetic Interference
EOL	End of Life
EoM	End of Mission
EOP	Experiment Operations Plan
E-PIP	Experiment Proposal Information Package
ESA	European Space Agency
ESD	Electrostatic Discharge
ESOC	European Space Operations Centre
ESTEC	European Space Research and Technology Centre
ESTRACK	European Space Tracking stations (ESA)
ETM	Electrical Test Model
ETRR	Environmental Test Readiness Review
FCP	Flight Control Procedures
FDD	Functional Design Description Document
FDIR	Failure Detection Isolation and Recovery
FDIS	Failure Detection Isolation and Safing
FDS	Flight Dynamics System
FEM	Finite Element Model
FFT	Fast Fourier Transform
FFT	Full Functional Test
FM	Flight Model
FMEA	Failure Modes and Effects Analysis
FMECA	Failure Modes, Effects and Criticality Analysis
FOP	Flight Operations Plan
FOS	Factor of Safety
FOSU	Ultimate Factor of Safety
FOSY	Yield design Factor of Safety
FOV	Field of View
FRD	Functional Requirements Document
FS	Flight Spare
FTA	Fault Tree Analysis
FTIR	Fourier Transform Infrared Spectrometer
GDS	Ground Data System
GMM	Geometrical Mathematical Model
GNC	Guidance, Navigation and Control
GSE	Ground Support Equipment
HGA	High Gain Antenna
HK	Housekeeping
HR	High Resolution (imaging)
HW	Hardware
I/F	Interface
I2R2	Instrument Integration Readiness Review
IAA	Instrument Accommodation Assessment
ICD	Interface Control Document
I-CDR	Instrument Critical Design Review
IDR	Instrument Delivery Review
IFPDR	Instrument Interface Preliminary Design Review

Abbreviation	Meaning
IIM	Instrument Interface Meeting
ILS	Instrument Line of Sight
I-ORR	Instrument Operational Readiness Review
IOS	Industrial Organization Structure
IP	Instrument Provider
I-PDR	Instrument Preliminary Design Review
I-QR	Instrument Qualification Review
IR	Infrared
ISM	Instrument Software Model
ISO	International Standards Organisation
IST	Integrated System Test
ISW	Instrument software
ITMM	Interface Thermal Mathematical Model
JIDT	ESA/NASA Joint Instrument Definition Team
JPL	Jet Propulsion Laboratory, California Institute of Technology
LCL	Latching Current Limiter
LEOP	Launch and Early Orbit Phase
LISN	Line Impedance Simulation Network
LL	Limit Load
MA	Mission Assurance
MAR	Mission Assurance Requirements
MCS	Mission Control System
MGSE	Mechanical Ground Support Equipment
MLI	Multi-layer Insulation
MOC	Mission Operations Centre
MOI	Mars Orbit Insertion
MOS	Mission Operations System
MPS	Mission Planning System
MRB	Material Review Board
MRC	(Spacecraft) Master Reference Cube
NASA	National Aeronautics and Space Agency
NB	Narrow Band
NIS	Network Interface System
NVR	Non-volatile Residue
OM	Orbiter Module
ORR	Operational Readiness Review
P/L	Payload
PA	Product Assurance
PAR	Product Assurance Requirements
PDR	Preliminary Design Review
PDS	Planetary Data System
PDU	Power Distribution Unit
PFM	Protoflight Model
PI	Principal Investigator
PISA	PI Support Area
PL	Proof Load

Abbreviation	Meaning
POR	Payload Operations Requests
PP	Planetary Protection
PS	Project Scientist
PSA	Parts Stress Analysis
PTR	Pointing Request
QA	Quality Assurance
QL	Qualification Load
QM	Qualification Model
QR	Qualification Review
RCO	Relay Coordination Office (NASA = NRCO, ESA = ERCO)
REE	Radiated Electric Field Emission
RGMM	Reduced Geometrical Mathematical Model
RML	Recovered Mass Loss
RMS	Root Mean Square (also r.m.s.)
RMS	Radiated Magnetic Susceptibility
RPE	Relative Pointing Error
RTMM	Reduced Thermal Mathematical Model
S/C	Spacecraft
SCC	Spacecraft Composite
SCET	Spacecraft Elapsed Time
SDRL	Subcontract Data Requirements List
SEE	Single Event Effects
SEEA	Single Event Effects Analysis
SFT	Short Functional Test
SIM	System Simulator
SIRP	System Interface Reference Point
SMAR	Safety and Mission Assurance Requirements
SMM	Structural Mathematical Model
SOC	Science Operations Centre
SOW	Statement of Work
SPF	Single Point Failure
SPG	Single Point Ground
SRS	Shock Response Spectrum
STM	Structural and Thermal Model
STR	Star Tracker
SVT	System Validation Test
SW	Software
TAS-F	Thales Alenia Space, France
TAS-I	Thales Alenia Space, Italy
TB	Thermal Balance
TBC	To be confirmed
TBD	To be determined
TC	Telecommand
TCM	Trajectory Correction Maneuvre
TCS	Thermal Constrol Subsystem
TDI	Time Delay and Integration (sensor)
TM	Telemetry

Abbreviation	Meaning
TML	Total Mass Loss
TMM	Thermal Mathematical Model
TRP	Thermal Reference Point
TV	Thermal Vacuum
TVS	Thermal Vacuum Stability
UHF	Ultra-High Frequency
V&V	Verification and Validation
VBQC	Vacuum Balance Quartz Contamination
WCA	Worst Case Analysis

End of Document